(Corporate Contracts Department)
The Tata Power Company Limited, 2nd Floor, Sahar Receiving Station
Sahar Airport Road, Andheri East, Mumbai-400059

Procedure for Participating in Tender

Tender Enquiry No.	Work Description	Estimated Cost/EMD (₹)	Tender Participation Fee (₹)	Last date and time for Payment of Tender Participation Fee
TPCODM/SS/O/N 019	RATE CONTRACT FOR SUPPLY OF POLYCARBONATE METER BOX- **NESCO** (For Single Phase and Poly Phase Meters)	1512.33 Lacs / 13 Lacs	5000	25.02.2021; 1500 Hrs

Please note that corresponding details mentioned in this document will supersede any other details mentioned anywhere else in the Tender Document.

Procedure for Participating in Tender. Following steps to be done before "Last date and time for Payment of Tender Participation Fee" as mentioned above

1.

a. **For Regular Bidders**- Non-Refundable Tender Participation Fee, as indicated in table above, to be submitted in the form of

Direct deposit in the following bank account and submit the receipt along with a covering letter clearly indicating the Tender Reference number –

Beneficiary Name – The Tata Power Co. Ltd.

Bank Name – HDFC Bank Ltd.

Branch Name – Fort Branch, Mumbai

Address – Maneckji Wadia Building, Nanik Motwani Marg, Fort, Mumbai 400023.

Branch Code – 60

Bank & Branch Code – 400240015

Account No – 00600110000763

Account type – CC

IFSC Code – HDFC0000060

b. **For MSME Category Bidders**- Bidders from MSME category are exempted for payment of tender fee. Interested MSME bidders are required to submit undertaking with valid registration certificate before last date and time of tender purchase.

2. **Authorization letter**- Eligible and Interested Bidders to submit duly signed and stamped letter on Bidder's letterhead indicating
    a. Tender Enquiry number
    b. Name of authorized person
    c. Contact number
    d. e-mail id
    e. Details of submission of Tender Participation Fee

E-mail with necessary attachments as per step 1 and 2, as indicated above to be sent to subhanjali.sanyal@tatapower.com with copy to pnramesh@tatapower.com before "Last date and time for Payment of Tender Participation Fee", after which link from Tata Power E-Tender system (Ariba) will be shared for further communication and bid submission

Please note all future correspondence regarding the tender, bid submission, bid submission date extension, Pre-bid query etc will be only through Tata Power E-Tender system (Ariba). User manual to guide the bidders to submit the bid through e-Tender system (Ariba) is also enclosed.

No e-mail or verbal correspondence will be responded. All communication will be done strictly with the bidder who have complied with above steps to participate in the Tender.

Also it may be strictly noted that once date of "Last date and time for Payment of Tender Participation Fee" is lapsed no Bidder will be sent link from Tata Power E-Tender System (Ariba). Without this link vendor will not be able to participate in the tender. Any last moment request to participate in tender will not be entertained.

Any payment of Tender Participation Fee / EMD by Bidder who have not done the pre-requisite within stipulated timeline will not be refunded.

TATA POWER

Tender Documents

CONFIDENTIAL

RFx No.: NA **NIT No.:** TPCODM/SS/O/N019

OPEN TENDER NOTIFICATION

FOR

RATE CONTRACT FOR SUPPLY OF POLYCARBONATE METER BOX (For Single Phase and Poly Phase Meters)

Tender Enquiry No.: TPCODM/SS/O/N019

Due Date for Bid Submission: 09.03.2021 [15:00 Hrs.]

CONFIDENTIAL

The Tata Power Company Limited
Mumbai, Maharashtra

(Tender for Upcoming Distribution Circle at Odisha-NESCO)

Property of TPC – Not to be reproduced without prior written permission of TPC

CONTENTS OF THE ENQUIRY

S. NO.	PARTICULARS
1.	Event Information
2.	Evaluation Criteria
3.	Submission of Bid Documents
4.	Bid Opening & Evaluation process
5.	Award Decision
6.	Order of Preference/Contradiction
7.	Post Award Contract Administration
8.	Specifications and Standards
9.	General Conditions of Contract
10.	Safety
Annexures	
I.	Annexure I – Schedule of Items
II.	Annexure II – Technical Specifications
III.	Annexure III – Schedule of Deviations
IV.	Annexure IV – Schedule of Commercial Specifications
V.	Annexure V – Document Check List
VI.	Annexure VI – Acceptance Form for Participation in Reverse Auction Event
VII.	Annexure VII – General Condition of Contract

CONFIDENTIAL

Property of TPC – Not to be reproduced without prior written permission of TPC

1.0 Event Information

1.1 Scope of work

Open Tenders are invited in through e-tender bidding process from interested and eligible Bidders for entering into a Rate Contracts valid for a period of **Two Year** as defined below :

Line Item no.	Description	EMD Amount (Rs.)	Tender Fee (Rs.)
1	Rate Contract for Supply of Single Phase Meter Box (Quantity - 4,63,000 nos.)	13.00 Lac	5,000
2	Rate Contract for Supply of Poly Phase Meter Box (Quantity – 36,000 nos.)		

Tender evaluation criteria shall be line item basis.

1.2 Availability of Tender Documents

Refer "Procedure for participating in tender".

1.3 Calendar of Events

(a)	Date of sale/ availability of tender documents from TPC Website	From 18th February 2021 onwards
(b)	Date by which interested and eligible vendors to pay tender fee and confirm participation in accordance with "Procedure for participating in tender"	25th February 2021 ; 1500 Hrs
(c)	Date & Time of Pre-Bid Meeting (If any)	NA
(d)	Last Date of receipt of pre-bid queries, if any	1st March 2021; 1500 Hours
(e)	Last Date of Posting Consolidated replies to all the pre-bid queries as received	4th March 2021
(f)	Last date and time of receipt of Bids	9th March 2021 up to 1500 Hours
(g)	Date & Time of opening technical bids & EMD (Envelope-1 & 2)	Participating Bidders will get mail intimation from Tata Power E-Tender system (Ariba)when their Technical Bids are opened. Refer Section 4.2 for details
(h)	Date & Time of opening of Price of qualified bids	Bidders will get mail intimation from Tata Power E-Tender system (Ariba) when their Price Bids are opened. Refer Section 4.5 for details.

CONFIDENTIAL

Property of TPC – Not to be reproduced without prior written permission of TPC

Note :-In the event of extension of last date of submission of bids, same shall be intimated to the participating bidders through e-tender system.

1.4 Mandatory documents required along with the Bid

1.4.1 EMD of requisite value and validity
1.4.2 Tender Fee in case the tender is downloaded from website
1.4.3 Requisite Documents for compliance to Qualification Criteria mentioned in Clause 1.7.
1.4.4 Drawing, Type Test details along with a sample of each item as specified at Annexure I (as applicable)
1.4.5 Duly signed and stamped 'Schedule of Deviations' as per Annexure III on bidder's letter head.
1.4.6 Duly signed and stamped 'Schedule of Commercial Specifications' as per Annexure IV on bidder's letter head.
1.4.7 Proper authorization letter/ Power of Attorney to sign the tender on the behalf of bidder.
1.4.8 Copy of PAN, GST, PF and ESI Registration (In case any of these documents is not available with the bidder, same to be explicitly mentioned in the 'Schedule of Deviations')
1.4.9 **Sample Submission/Demonstration:** Tata Power Reserves the right to seek samples and/or demonstration of offered equipment during Technical Evaluation. Samples/demonstration will be sought by Technical team doing Technical Evaluation. The same may have to submitted/arranged on urgent basis at Tata Power location at Odisha / Delhi. Bidder not able to submit sample/perform demonstration in time, may get Technically rejected.

Please note that in absence of any of the above documents, the bid submitted by a bidder shall be liable for rejection.

1.5 Deviation from Tender

Normally, the deviations to tender terms are not admissible and the bids with deviation are liable for rejection. Hence, the bidders are advised to refrain from taking any deviations on this Tender. Still in case of any deviations, all such deviations shall be set out by the Bidders, clause by clause in the 'Annexure III - Schedule of Deviations' and same shall be submitted as a part of the Technical Bid.

1.6 Right of Acceptance/ Rejection

Bids are liable for rejection in absence of following documents:-

1.6.1 EMD of requisite value and validity
1.6.2 Tender fee of requisite value
1.6.3 Price Bid as per the Price Schedule mentioned in Annexure-I
1.6.4 Necessary documents against compliance to Qualification Requirements mentioned at Clause 1.7 of this Tender Document.
1.6.5 Filled in Schedule of Deviations as per Annexure III
1.6.6 Filled in Schedule of Commercial Specifications as per Annexure IV
1.6.7 Receipt of Bid within the due date and time

TPC reserves the right to accept/reject any or all the bids without assigning any reason thereof.

1.7 Qualification Criteria

CONFIDENTIAL

Property of TPC – Not to be reproduced without prior written permission of TPC

1. *The bidder should have average annual turnover of Rs.1 Crore in last three years (FY 16-17, FY 17-18 and FY 18-19). Audited balance sheet, profit and loss account and auditors report from the statutory auditors of the company required).*
2. *The bidder should have own manufacturing facility for manufacturing of polycarbonate meter boxes (Copy of self-undertaking / certificate required).*
3. *The bidder should have supplied 1 Lac nos. of polycarbonate meter boxes during last five financial year. Purchase order / Completion Certificate shall be required in support of this requirement.*
4. *The bidder should have in-house testing facilities for acceptance tests as per applicable technical specification in this tender (Self undertaking along with detail of testing equipment's with make required).*

1.8 Marketing Integrity

We have a fair and competitive marketplace. The rules for bidders are outlined in the General Condition of Contracts. Bidders must agree to these rules prior to participating. In addition to other remedies available, TPC reserves the right to exclude a bidder from participating in future markets due to the bidder's violation of any of the rules or obligations contained in the General Condition of Contracts. A bidder who violates the market place rules or engages in behavior that disrupts the fair execution of the marketplace, may result in restriction of a bidder from further participation in the marketplace for a length of time, depending upon the seriousness of the violation. Examples of violations include, but are not limited to:

- Failure to honor prices submitted to the marketplace
- Breach of terms as published in TENDER/NIT

1.9 Supplier Confidentiality

All information contained in this tender is confidential and shall not be disclosed, published or advertised in any manner without written authorization from TPC. This includes all bidding information submitted to TPC. All tender documents remain the property of TPC and all suppliers are required to return these documents to TPC upon request. Suppliers who do not honor these confidentiality provisions will be excluded from participating in future bidding events.

2.0 Evaluation Criteria

- The bids will be evaluated technically on the compliance to tender terms and conditions.
- The bids will be evaluated commercially on **overall lowest cost (Line-Item basis)** as calculated in Schedule of Items *[Annexure I]* .TPC reserves the right to split the order line item wise and / or quantity wise among more than one Bidder. Hence all bidders are advised to quote their most competitive rates against each line item.
- Bidder has to mandatorily quote as per schedule of item [Annexure-I]. Failing to do so TPC may reject the bid.

NOTE: In case of a new bidder not registered, factory inspection and evaluation shall be carried out to ascertain bidder's manufacturing capability and quality procedures. However TPC reserves the right to carry out factory inspection and evaluation for any bidder prior to technical qualification. In case a bidder is found as Disqualified in the factory evaluation, their bid shall not be evaluated any further and shall be summarily rejected. The decision of TPC shall be final and binding on the bidder in this regard.

2.1 Price Variation Clause: The prices shall remain **firm** during the entire contract period.

CONFIDENTIAL

Property of TPC – Not to be reproduced without prior written permission of TPC

3.0 Submission of Bid Documents

3.1 Bid Submission

Bidders are requested to submit their offer in line with this Tender document.

All correspondence regarding the tender, bid submission, bid submission date extension, Pre-bid query etc will happen only through Tata Power E-Tender system (Ariba).

No e-mail or verbal correspondence will be responded. All communication will be done strictly with the bidders who have participated in the Tender as elaborated in procedure for participating in tender.

Bids shall be submitted in 3 (Three) parts:

FIRST PART: "EMD" as applicable shall be submitted. The EMD shall be valid for 210 days from the due date of bid submission in the form of Bank Guarantee (BG) favoring 'The Tata Power Company Limited". The EMD BG has to be strictly in the format as mentioned in General Condition of Contract, failing which it shall not be accepted and the bid as submitted shall be liable for rejection.

EMD shall be strictly in the format of Bank Guarantee and Original Hard Copy shall be delivered at the following address in Envelope clearly indicating Tender Reference Number, Name of Tender and Bidder Name

Head Contracts Transmission and Distribution
The Tata Power Company Limited
Smart Center of Procurement Excellence, 2nd Floor, Sahar Receiving Station
Sahar Airport Road, Andheri East, Mumbai-400059 Maharashtra.

SECOND PART: "TECHNICAL BID" shall contain the following documents:

a) Documentary evidence in support of qualifying criteria
b) Technical literature/GTP/Type test report etc. *(if applicable)*
c) Qualified manpower (if available)
d) Testing facilities *(if applicable)*
e) No Deviation Certificate as per the Annexure III – Schedule of Deviations
f) Acceptance to Commercial Terms and Conditions viz Delivery schedule/period, payment terms etc. as per the Annexure IV – Schedule of Commercial Specifications.
g) Quality Assurance Plan/Inspection Test Plan for supply items *(if applicable)*

The technical bid shall be properly indexed and is to be submitted through e-tender. Hard Copy of Technical Bids not to be submitted.

THIRD PART: "PRICE BID" shall contain only the price details and strictly in format as mentioned in Annexure I with explicit break up of basic prices, Taxes & duties, Freight etc. In case any discrepancy is observed between the item description stated in Schedule of Items mentioned in the tender and the price bid submitted by the bidder, the item description as mentioned in the tender document (to the extent modified through Corrigendum issued if any) shall prevail. Price Bid is to be submitted in Soft Copy through Tata Power E-Tender system (Ariba) only. **Hard Copy of Price Bid not to be submitted.**

SIGNING OF BID DOCUMENTS:

CONFIDENTIAL

Property of TPC – Not to be reproduced without prior written permission of TPC

The bid must contain the name, residence and place of business of the person or persons making the bid and must be signed and sealed by the Bidder with his usual signature. The names of all persons signing should also be typed or printed below the signature.

The Bid being submitted must be signed by a person holding a Power of Attorney authorizing him to do so, certified copies of which shall be enclosed.

The Bid submitted on behalf of companies registered with the Indian Companies Act, for the time being in force, shall be signed by persons duly authorized to submit the Bid on behalf of the Company and shall be accompanied by certified true copies of the resolutions, extracts of Articles of Association, special or general Power of Attorney etc. to show clearly the title, authority and designation of persons signing the Bid on behalf of the Company. Satisfactory evidence of authority of the person signing on behalf of the Bidder shall be furnished with the bid.

A bid by a person who affixes to his signature the word 'President', 'Managing Director', 'Secretary', 'Agent' or other designation without disclosing his principal will be rejected.

The Bidder's name stated on the Proposal shall be the exact legal name of the firm.

3.2 Contact Information

Please note all correspondence regarding the tender, bid submission, bid submission date extension, Pre-bid query etc will happen only through Tata Power E-Tender system (Ariba).

No e-mail or verbal correspondence will be responded. All communication will be done strictly with the bidders who have participated in the Tender as elaborated in procedure for participating in tender.

Communication Details:

Package Owner : Subhanjali Sanyal

Email id: Subhanjali.sanyal@tatapower.com

Copy to : Group Head Contracts – T&D

Name: **Mr. P N Rameshkumar**

E-Mail ID : pnramesh@tatapower.com

Bidders are strictly advised to communicate with Package Owner through Tata Power E-tender System (Ariba) only. They need to pay Tender Participation Fee and receive the Ariba log-in as elaborated in Procedure for Participating in Tender. Above contact details are for reference purpose only.

3.3 Bid Prices

Bidders shall quote for the entire Scope of Supply / work with a break up of prices for individual items and Taxes & duties. The bidder shall complete the appropriate Price Schedules included herein, stating the Unit Price for each item & total price with taxes, duties & freight up to destination at various sites of TPC. The all-inclusive prices offered shall be inclusive of all costs as well as Duties, Taxes and Levies paid or payable during the execution of the supply work, breakup of price constituents.

CONFIDENTIAL

Property of TPC – Not to be reproduced without prior written permission of TPC

The quantity break up shown else-where other than Price Schedule is tentative. The bidder shall ascertain himself regarding material required for completeness of the entire work. Any items not indicated in the price schedule but which are required to complete the job as per the Technical Specifications / Scope of Work mentioned in the tender, shall be deemed to be included in prices quoted.

3.4 Bid Currencies

Prices shall be quoted in Indian Rupees Only.

3.5 Period of Validity of Bids

Bids shall remain valid for 180 days from the due date of submission of the bid.

Notwithstanding clause above, the TPC may solicit the Bidder's consent to an extension of the Period of Bid Validity. The request and responses thereto shall be made in writing.

3.6 Alternative Bids

Bidders shall submit Bids, which comply with the Bidding documents. Alternative bids will not be considered. The attention of Bidders is drawn to the provisions regarding the rejection of Bids in the terms and conditions, which are not substantially responsive to the requirements of the bidding documents.

3.7 Modifications and Withdrawal of Bids

The bidder is not allowed to modify or withdraw its bid after the Bid's submission. The EMD as submitted along with the bid shall be liable for forfeiture in such event.

3.8 Earnest Money Deposit (EMD)

The bidder shall furnish, as part of its bid, an EMD amounting as specified in the tender. The EMD is required to protect the TPC against the risk of bidder's conduct which would warrant forfeiture.

The EMD shall be forfeited in case of:

a) The bidder withdraws its bid during the period of specified bid validity.

Or

b) The case of a successful bidder, if the Bidder does not
i) accept the purchase order, or
ii) furnish the required performance security BG

3.9 Type Tests (if applicable)

The type tests specified in TPC specifications should have been carried out within five years prior to the date of opening of technical bids and test reports are to be submitted along with the bids. If type tests carried out are not within the five years prior to the date of bidding, the bidder will arrange to carry out type tests specified, at his cost. The decision to accept/ reject such bids rests with TPC.

4.0 Bid Opening & Evaluation process

4.1 Process to be confidential

Information relating to the examination, clarification, evaluation and comparison of Bids and recommendations for the award of a contract shall not be disclosed to Bidders or any other persons not officially concerned with such process. Any effort by a Bidder to influence the TPC's processing of Bids or award decisions may result in the rejection of the Bidder's Bid.

Property of TPC – Not to be reproduced without prior written permission of TPC

CONFIDENTIAL

4.2 Technical Bid Opening

The bids shall be opened internally by TPC. First the envelope marked "EMD" will be opened. Bids without EMD/ cost of tender (if applicable) of required amount/ validity in prescribed format, shall be rejected.

Next, technical bids of bidders who have submitted EMD shall be opened. Participating Bidders will get mail intimation from Tata Power E-Tender system (Ariba) when their Technical Bids are opened.

4.3 Preliminary Examination of Bids/ Responsiveness

TPC will examine the Bids to determine whether they are complete, whether any computational errors have been made, whether required sureties have been furnished, whether the documents have been properly signed, and whether the Bids are generally in order. TPC may ask for submission of original documents in order to verify the documents submitted in support of qualification criteria.

Arithmetical errors will be rectified on the following basis: If there is a discrepancy between the unit price and the total price per item that is obtained by multiplying the unit price and quantity, the unit price shall prevail and the total price per item will be corrected. If there is a discrepancy between the Total Amount and the sum of the total price per item, the sum of the total price per item shall prevail and the Total Amount will be corrected.

Prior to the detailed evaluation, TPC will determine the substantial responsiveness of each Bid to the Bidding Documents including production capability and acceptable quality of the Goods offered. A substantially responsive Bid is one, which conforms to all the terms and conditions of the Bidding Documents without material deviation.

Bid determined as not substantially responsive will be rejected by the TPC and/or the TPC and may not subsequently be made responsive by the Bidder by correction of the non-conformity.

4.4 Techno Commercial Clarifications

Bidders need to ensure that the bids submitted by them are complete in all respects. To assist in the examination, evaluation and comparison of Bids, TPC may, at its discretion, ask the Bidder for a clarification on its Bid for any deviations with respect to the TPC specifications and attempt will be made to bring all bids on a common footing. All responses to requests for clarification shall be in writing and no change in the price or substance of the Bid shall be sought, offered or permitted owing to any clarifications sought by TPC.

4.5 Price Bid Opening

Price Bid of only Technically and / or Safety Qualitied Bidders shall be considered and open internally by TPC. Bidders will get mail intimation from Tata Power E-Tender system (Ariba) when their Price Bids are opened. The EMD of the bidder withdrawing or substantially altering his offer at any stage after the technical bid opening will be forfeited at the sole discretion of TPC without any further correspondence in this regard.

4.6 Not Used

4.7 Reverse Auctions

TPC reserves the right to conduct the reverse auction (instead of public opening of price bids) for the products/ services being asked for in the tender. The terms and conditions for such reverse auction events shall be as per the Acceptance Form attached as Annexure VI of this document. The bidders along with the tender document shall mandatorily submit a duly signed copy of the Acceptance Form attached as Annexure VI as a token of acceptance for the same.

Property of TPC – Not to be reproduced without prior written permission of TPC

5.0 Award Decision

TPC will award the contract to the successful bidder whose bid has been determined to be the lowest-evaluated responsive bid as per the Evaluation Criterion mentioned at Clause 2.0. The Cost for the said calculation shall be taken as the all-inclusive cost quoted by bidder in Annexure I (Schedule of Items) subject to any corrections required in line with Clause 4.3 above. The decision to place rate contract / purchase order / LOI solely depends on TPC on the cost competitiveness across multiple lots, quality, delivery and bidder's capacity, in addition to other factors that TPC may deem relevant.

TPC reserves all the rights to award the contract to one or more bidders so as to meet the delivery requirement or nullify the award decision without assigning any reason thereof.

In case any supplier is found unsatisfactory during the delivery process, the award will be cancelled and TPC reserves the right to award other suppliers who are found fit.

NOTE : Please note that Intimation of Price Bid Opening will go only to those bidders who are Technically Acceptable and whose price bid are opened. Bidders who are not successful in technical or commercial part of the process will be intimated to collect EMD only after end of process.

It is informed that TPC shall not provide status updates or give explanation of process followed for bidder selection criteria whatsoever, to any participating bidder.

6.0 Order of Preference/Contradiction:

In case of contradiction in any part of various documents in tender, following shall prevail in order of preference:

1. Schedule of Items (Annexure I)
2. Post Award Contract Administration (Clause 7.0)
3. Submission of Bid Documents (Clause 3.0)
4. Scope of Work and SLA (if any)
5. Technical Specifications (Annexure II)
6. Inspection Test Plan (if any)
7. Acceptance Form for Participation in Reverse Auction (Annexure VI)
8. General Conditions of Contract (Annexure VII)

7.0 Post Award Contract Administration

7.1 Special Conditions of Contract

- After finalization of tender, Rate Contract shall be issued on successful bidder with a validity period of **TWO Year**. Prices shall remain firm till validity of issued rate contract. Within the validity of rate contract and as per requirement of material, release order shall be issued time to time.
- Business Associate (BA) shall submit applicable Performance Bank Guarantee as per GCC within 30 days of issuance of rate contract. PBG applicable shall 5% of Rate Contract Value. PBG submitted, shall be released after completion of applicable guarantee period plus one month.
- Guarantee applicable shall be as per technical specifications.
- BA shall submit GTP / Drawing within 2 weeks from issuance of rate contract. In case BA does not get necessary approvals for issuance of manufacturing clearances / CAT-A within mentioned

CONFIDENTIAL

Property of TPC – Not to be reproduced without prior written permission of TPC

/ mutually agreed timelines , then TPC reserve the right to cancel issued rate contract / release order and also reserve the right to forfeit EMD / PBG.

- Delivery period shall be 60 days from date of receipt of release order/ CAT-A issuance, whichever is later.
- TPC shall short close the issued Release Order / Rate contract, in case of any quality issues.
- Any change in statutory taxes, duties and levies shall be borne by TPC.
- All other terms and conditions of TPC GCC shall be applicable.

7.2 Drawing Submission & Approval

The relevant drawings and GTPs need to be submitted as per special condition of contract mentioned in point no. 7.1.

7.3 Delivery Terms

The delivery of material shall be made as per special condition of contract mentioned in point 7.1.

7.4 Warranty Period

Guarantee Period of the supplied material shall be as per technical specification attached separately with this tender.

7.5 Payment Terms

On delivery of the materials in good condition and certification of acceptance by certified official, Associate shall submit the Bills/ Invoices in original in the name of Tata Power Company Limited to Invoice Desk. The payment shall be released **within 90 days** from the date of submission of certified bills/ invoices

7.6 Climate Change

Significant quantities of waste are generated during the execution of project and an integrated approach for effective handling, storage, transportation and disposal of the same shall be adopted. This would ensure the minimization of environmental and social impact in order to combat the climate change

7.7 Ethics

- TPC is an ethical organization and as a policy TPC lays emphasis on ethical practices across its entire domain. Bidder should ensure that they should abide by all the ethical norms and in no form either directly or indirectly be involved in unethical practice.
- TPC work practices are governed by the Tata Code of Conduct which emphasizes on the following:
- We shall select our suppliers and service providers fairly and transparently.
- We seek to work with suppliers and service providers who can demonstrate that they share similar values. We expect them to adopt ethical standards comparable to our own.
- Our suppliers and service providers shall represent our company only with duly authorized written permission from our company. They are expected to abide by the Code in their interactions with, and on behalf of us, including respecting the confidentiality of information shared with them.
- We shall ensure that any gifts or hospitality received from, or given to, our suppliers or service providers comply with our company's gifts and hospitality policy.
- We respect our obligations on the use of third party intellectual property and data.

CONFIDENTIAL

Property of TPC – Not to be reproduced without prior written permission of TPC

Bidder is advised to refer GCC attached at Annexure IX for more information.

Any ethical concerns with respect to this tender can be reported to the following e-mail ID: cecounsellor@tatapower.com

8.0 Specification and standards:

Attached separately with tender.

9.0 General Condition of Contract

Any condition not mentioned above shall be applicable as per GCC for Supply attached along with this tender.

10.0 Safety

Safety related policies is put in the Company's website .

http://www.tatapower.com

.

CONFIDENTIAL

Property of TPC – Not to be reproduced without prior written permission of TPC

ANNEXURE I
Schedule for Items

Line Item no.	Description	Qty	UoM	Ex. Work (in Rs.) A	GST (in Rs.) B	Unit Price with GST (in Rs.) A+B	Amount (in Rs.) Q x (A+B)
Line Item -1	Polycarbonate Meter Box - Single Phase type	4,63,000	EA				
Line Item- 2	Polycarbonate Meter Box - Poly Phase type	36,000	EA				

NOTE:

- The overall period of the rate contract shall be for a period of **TWO years** and prices shall be firm till the validity of contract. Release order shall be issued as per requirement of TPC.
- The bids will be evaluated commercially on the overall lowest cost for each line item.
- The unit price with GST in column no. 7, is landed price for TPC at their store.
- The bidders are advised to quote prices strictly in the above format. Failing to do so, bids are liable for rejection.
- The bidder must fill each and every column of the above format. ***Mentioning "extra/inclusive" in any of the column may lead for rejection of the price bid.***
- No cutting/ overwriting in the prices is permissible.

CONFIDENTIAL

Property of TPC – Not to be reproduced without prior written permission of TPC

ANNEXURE II

Technical Specifications attached separately with the tender.

ANNEXURE III

Schedule of Deviations

Bidders are advised to refrain from taking any deviations on this TENDER. Still in case of any deviations, all such deviations from this tender document shall be set out by the Bidders, Clause by Clause in this schedule and submit the same as a part of the ***Technical Bid.***

Unless specifically mentioned in this schedule, the tender shall be deemed to confirm the TPC's specifications:

S. No.	Clause No.	Tender Clause Details	Details of deviation with justifications

By signing this document we hereby withdraw all the deviations whatsoever taken anywhere in this bid document and comply to all the terms and conditions, technical specifications, scope of work etc. as mentioned in the standard document except those as mentioned above.

Seal of the Bidder:

Signature:

Name:

CONFIDENTIAL

Property of TPC – Not to be reproduced without prior written permission of TPC

ANNEXURE IV

Schedule of Commercial Specifications

(The bidders shall mandatorily fill in this schedule and enclose it with the offer Part I: Technical Bid. In the absence of all these details, the offer may not be acceptable.)

S. No.	Particulars	Remarks
1.	Prices firm or subject to variation (If variable indicate the price variation clause with the ceiling if applicable)	Firm / Variable
1a.	If variable price variation on clause given	Yes / No
1b.	Ceiling	--------- %
1c.	Inclusive of Excise Duty	Yes / No (If Yes, indicate % rate)
1d.	Sales tax applicable at concessional rate	Yes / No (If Yes, indicate % rate)
1e.	Octroi payable extra	Yes / No (If Yes, indicate % rate)
1f.	Inclusive of transit insurance	Yes / No
2.	Delivery	Weeks / months
3.	Guarantee clause acceptable	Yes / No
4.	Terms of payment acceptable	Yes / No
5.	Performance Bank Guarantee acceptable	Yes / No
6.	Liquidated damages clause acceptable	Yes / No
7.	Validity (180 days) (From the date of opening of technical bid)	Yes / No
8.	Inspection during stage of manufacture	Yes / No
9.	Rebate for increased quantity	Yes / No (If Yes, indicate value)
10.	Change in price for reduced quantity	Yes / No (If Yes, indicate value)
11.	Covered under Small Scale and Ancillary Industrial Undertaking Act 1992	Yes / No (If Yes, indicate, SSI Reg'n No.)

CONFIDENTIAL

Property of TPC – Not to be reproduced without prior written permission of TPC

ANNEXURE V

Checklist of all the documents to be submitted with the Bid

Bidder has to mandatorily fill in the checklist mentioned below:-

S. No.	Documents attached	Yes / No / Not Applicable
1	EMD of required value	
2	Tender Fee as mentioned in this RFQ	
3	Company profile/ organogram	
4	Signed copy of this RFQ as an unconditional acceptance	
5	Duly filled schedule of commercial specifications (Annexure IV)	
6	Sheet of commercial/ technical deviation if any (Annexure III)	
7	Balance sheet for the last completed three financial years; mandatorily enclosing Profit & loss account statement	
8	Acknowledgement for Testing facilities if available (duly mentioned on bidder letter head)	
9	List of Machine/ tools with updated calibration certificates if applicable	
10	Details of order copy (duly mentioned on bidder letter head)	
11	Order copies as a proof of quantity executed	
12	Details of Type Tests if applicable (duly mentioned on bidder letter head)	
13	All the relevant Type test certificates as per relevant IS/ IEC (CPRI/ ERDA/ other certified agency) if applicable	
14	Project/ Supply Completion certificates	
15	Performance certificates	
16	Client Testimonial/ Performance Certificates	
17	Credit rating/ Solvency certificate	
18	Undertaking regarding non blacklisting (On company letter head)	
19	List of trained/ Untrained Manpower	

CONFIDENTIAL

Property of TPC – Not to be reproduced without prior written permission of TPC

Annexure VI

Acceptance Form for Participation In Reverse Auction Event

(To be signed and stamped by the bidder)

In a bid to make our entire procurement process more fair and transparent, TPC intends to use the reverse auctions as an integral part of the entire tendering process. All the bidders who are found as technically qualified based on the tender requirements shall be eligible to participate in the reverse auction event.

The following terms and conditions are deemed as accepted by the bidder on participation in the bid event:

1. TPC shall provide the user id and password to the authorized representative of the bidder. *(Authorization Letter in lieu of the same shall be submitted along with the signed and stamped Acceptance Form).*
2. TPC will make every effort to make the bid process transparent. However, the award decision by TPC would be final and binding on the supplier.
3. The bidder agrees to non-disclosure of trade information regarding the purchase, identity of TPC, bid process, bid technology, bid documentation and bid details.
4. The bidder is advised to understand the auto bid process to safeguard themselves against any possibility of non-participation in the auction event.
5. In case of bidding through Internet medium, bidders are further advised to ensure availability of the entire infrastructure as required at their end to participate in the auction event. Inability to bid due to telephone line glitch, internet response issues, software or hardware hangs, power failure or any other reason shall not be the responsibility of TPC.
6. In case of intranet medium, TPC shall provide the infrastructure to bidders. Further, TPC has sole discretion to extend or restart the auction event in case of any glitches in infrastructure observed which has restricted the bidders to submit the bids to ensure fair & transparent competitive bidding. In case of an auction event is restarted, the best bid as already available in the system shall become the start price for the new auction.
7. In case the bidder fails to participate in the auction event due any reason whatsoever, it shall be presumed that the bidder has no further discounts to offer and the initial bid as submitted by the bidder as a part of the tender shall be considered as the bidder's final no regret offer. Any offline price bids received from a bidder in lieu of non-participation in the auction event shall be out-rightly rejected by TPC.
8. The bidder shall be prepared with competitive price quotes on the day of the bidding event.
9. The prices as quoted by the bidder during the auction event shall be inclusive of all the applicable taxes, duties and levies and shall be FOR at TPC site.
10. The prices submitted by a bidder during the auction event shall be binding on the bidder.
11. No requests for time extension of the auction event shall be considered by TPC.
12. The original price bids of the bidders shall be reduced on pro-rata basis against each line item based on the final all inclusive prices offered during conclusion of the auction event for arriving at Contract amount.

Signature & Seal of the Bidder

CONFIDENTIAL

Property of TPC – Not to be reproduced without prior written permission of TPC

Annexure VII

General Conditions of Contract – Attached separately with the tender.

CONFIDENTIAL

Property of TPC – Not to be reproduced without prior written permission of TPC

Technical Specifications (Annexure to Tender Documents)

CONFIDENTIAL

CONTENTS

1.0 SCOPE

2.0 APPLICABLE STANDARDS

3.0 CLIMATIC CONDITIONS OF THE INSTALLATION

4.0 GENERAL TECHNICAL REQUIREMENTS

5.0 GENERAL CONSTRUCTIONS

6.0 NAME PLATE AND MARKING

7.0 TESTS

8.0 TYPE TEST CERTIFICATES

9.0 PRE-DESPATCH INSPECTION

10.0 INSPECTION AFTER RECEIPT AT STORE

11.0 GUARANTEE

12.0 PACKING

13.0 TENDER SAMPLE

14.0 QUALITY CONTROL

15.0 MINIMUM TESTING FACILITIES

16.0 MANUFACTURING ACTIVITIES

17.0 SPARES,ACCESSORIES AND TOOLS

18.0 DRAWING AND DOCUMENTS

19.0 GURANTEED TECHNICAL PARTICULARS

20.0 SCHEDULE OF DEVIATIONS

Property of TPC – Not to be reproduced without permission of TPC

1 SCOPE

This specification covers the technical requirements of design, manufacture, testing at manufacturer's works, packing, forwarding, supply and unloading at store/site and performance of single phase push fit type meter box with all accessories for trouble free and efficient operation.

2 APPLICABLE STANDARDS

The equipment covered by this specification shall unless otherwise stated, be designed, manufactured and tested in accordance with the latest editions of the following Indian/International standards and shall conform to the regulations of the local statutory authorities.

IS: 14772-2000	General requirements for enclosure for accessories for household and similar fixed electrical installations-Specification
IS: 8623(Part 1)-1993	Specification for low-voltage switchgear and control gear assemblies Part 1 for type tested and partially type tested assemblies
IS: 11731(Part II)-1992	Methods of test for determination of Flammability of solid electrical insulating materials when exposed to an igniting source
IS 4249-1967	Specification for classification and method of test for non-ignitable and self-extinguishing properties of solid electrical insulating materials
IS 8828-1996	Electrical Accessories- Circuit Breakers for Over Current Protection for Household and Similar Installations
IS 5133(Part II)-1969	Specification for boxes for the enclosure of electrical accessories
IS 2500(Part 1)-2000	Sampling procedure for inspection by attributes part 1 sampling schemes indexed by acceptance quality limit (AQL) for lot-by-lot inspection
UL 746-C	Polymeric materials in electrical equipments

3 CLIMATIC CONDITIONS OF THE INSTALLATION

The atmosphere is generally laden with mild acid and dust suspended during dry months and subjected to fog in cold months. The design of the equipment and accessories shall be suitable to withstand seismic forces corresponding to an acceleration of 0.1g.

a) Max. Ambient Température : 50 deg.C
b) Max. Daily average ambient temp. : 40 deg.C
c) Min Ambient Temp : 0 deg C
d) Maximum Humidity : 95%
e) Minimum Humidity : 10%
f) Average No. of thunderstorm days per annum : 50
g) Average Annual Rainfall : 1450 mm
h) Average No. of rainy days per annum : 60
i) Rainy months : June to Oct.
j) Altitude above MSL not exceeding : 300 meters
k) Wind Pressure : 150kg/sq m up to an elevation of 10mtrs

Property of TPC – Not to be reproduced without permission of TPC

		The atmosphere is generally laden with mild acid and dust suspended during dry months and subjected to fog in cold months. The design of the equipment and accessories shall be suitable to withstand seismic forces corresponding to an acceleration of 0.3g

4.0 GENERAL TECHNICAL REQUIREMENTS

S. NO.	DESCRIPTION	REQUIREMENT
1	Application	Outdoor
2	Degree of ingress protection	IP 55
3	Flammability requirement	FV0
4	Grade of material	Polycarbonate with fire retardant, Self Extinguishing, UV stabilized and anti oxidation properties
5	Material a) Base : b) Cover :	a) Polycarbonate equivalent to Lexan 943 A with dark grey color b) Polycarbonate equivalent to Lexan 943 A with transparent clear (no color)
6	Thickness of box	2 mm (minimum)
7	Gasket material	Rubber
8	Material withstand temperature	125 deg. C +/- 2 deg. C
9	Dielectric withstand for the box	5 kV for 1 min
10	Preferred Size of the box HxLXD in mm	300x250x120

5.0	**GENERAL CONSTRUCTIONS**	5.1-The meter box shall be weather proof, tamper proof and shall be made of Injection moulded reinforce polycarbonate material with FV0 fire retardant, self-extinguishing, UV stabilization and Anti oxidation properties. Base shall be dark grey color whereas the cover shall be completely transparent for polycarbonate material .The material for base and cover shall be lexan 943 A or equivalent with 2 mm thickness. 5.2- The meter box shall have a taper roof for easy flow of rain water and shall have degree of IP55 for protection against dust and water. 5.3-The box shall be provided with meter mounting arrangement along with MS plate on top for mounting the meter from different manufacturers, having different mounting dimensions. The top plate shall be fixed on the base taking care of the alignment with the fixing holes provided in the base.The detail drawing of the mounting arrangement of all the meters shall be provided to successful bidders by the TPPDL. 5.4- The meter shall be mounted with the help of MS plate such that it is centrally placed in the box and there is clearance of 50 mm between the meter box and top of the cover. A minimum clearance of 50 mm shall be maintained on both sides, between meter and box. The overall minimum dimensions of meter box shall be

Property of TPC – Not to be reproduced without permission of TPC

Single phase push fit type Poly carbonate meter box	
Height	205mm
width	160mm
Depth	85 mm
Thickness of box	2mm ±0.2mm
Thickness of cover Transparent	2mm ±0.2mm
Self-locking male and female	04 No's
Meter fixing arrangement	1 No's
Push button	1 No's
Sealing Arrangement	02 No's
Inlet and outlet cable gland	02 No's
Suitable for outdoor installation	IP55
Gasket	Rubber
Holes for fixing meter box	4 No's

5.5- The design of the meter box shall be such as to easy facilitate easy wiring and access to meter terminals. Nylon gland of internal diameter of approx. 25 mm shall be provided for I/C and O/G cables of size 2Cx4/10 sq.mm or as approved by purchaser. The holes for I/C and O/G cables shall be provided in left and right side of meter box at bottom.

5.6- The number of pillers to be provided in box as per TPCODL's different type of meters. If there is any change in existing meter design or new meter introduced, bidder shall provide meter mounting piller and dimensions accordingly in meter box with modification in their mould without any extra cost.

5.7- Suitable rubber gasket of round shape (properly provided throughout the periphery) for protection all around the cover shall be provided. The box shall be provided with four fixing holes of suitable size.

5.8- After closing and sealing the meter box, it shall not be possible to forcefully enter any sharp object inside the box without breaking base/cover. Suitable overlapping (20 mm) shall be provided between base and cover to avoid access to the meter or its accessories inside the meter box by any means after sealing the box.

5.9- Box shall be provided with 1 no. earthing nut and bolt of size M8x35 mm on the left hand side in the base of meter box for providing earth connection. The earth terminal shall be identified by means of the sign ,marked in a legible manner on or adjacent the terminal.

Property of TPC – Not to be reproduced without permission of TPC

<table>
<tr><td>6.0</td><td>NAME PLATE AND MARKING</td><td>The meter box shall be provided with durable and legible name plate, effectively secured against removal. Name plate shall be embossed with “PO No with date” , “PROPERTY OF TPC ” , “ITEM CODE NUMBER” , The name plate shall be indelibly and distinctly marked with all essential particulars as per the relevant standards along with the following information :
a) Manufacturer’s name
b) Serial number
c) Month and Year of manufacturing
d) No supply number : XXXXXXXX
e) Property OF TPC</td></tr>
<tr><td>7.0</td><td>TESTS</td><td>All routine, acceptance & type tests shall be carried out in accordance with the relevant IS/IEC. All routine & acceptance tests shall be witnessed by the purchaser/his authorized representative. All the components shall also be type tested as per the relevant standards. Following tests shall be necessarily conducted on the meter box in addition to others specified in IS/IEC standards.</td></tr>
<tr><td>7.1</td><td>Type Test</td><td>
<table>
<tr><th>S.no.</th><th>Tests/ Standard</th><th>Requirements</th></tr>
<tr><td>1</td><td>Protection against electric shock
(IS : 14772 - 2000)</td><td>Enclosure shall be so designed that when they are mounted as for normal use, the live parts of any correctly installed accessories or any parts of these accessories which may become live due to a fault shall not be accessible.</td></tr>
<tr><td>2</td><td>Provision for earthing
(IS : 14772-2000)</td><td>Enclosure shall be provided with a facility for permanent and reliable connection to earthing</td></tr>
<tr><td>3</td><td>Resistance to ageing, humid conditions, Ingress of solid objects and to harmful ingress of water
(IS : 14772-2000</td><td>Resistance to Ageing : Enclosure shall be kept in a heating cabinet with temp 70 ± 2 deg C for 7 days as per IS. After completion of the test, the enclosure shall not show any cracks.
Humid conditions : Enclosure shall be kept in a cabinet with humidity between 91 to 95 % for 7 days as per IS. After completion of the test, the enclosure shall not show any cracks.
Resistance against ingress of solid objects and to harmful ingress of water : Enclosure shall be subjected to test for degree of protection (IP 55) as per IS 12063 IS 60529.</td></tr>
<tr><td>4</td><td>Mechanical strength/ Impact Resistance Test
(IS : 14772-2000)/(UL : 746 C)</td><td>The sample shall be subjected to Impact resistance test as per the respective standards and shall not show occurrence of any of the following:</td></tr>
</table>
</td></tr>
</table>

Property of TPC – Not to be reproduced without permission of TPC

				making uninsulated live parts accessible to contact, producing a condition that might affect the mechanical performances of the enclosure, producing a condition that would increase the likelihood of an electric shock	
			5	Resistance to heat / Ball Pressure Test (IS : 14772-2000)	The test shall be made on a sample in a heating cabinet at a temp of 125 ±2 deg C for 1 per IS. After completion of test, the diameter of the impression caused by the ball shall be measured and should not exceed 2 mm.
			6	Resistance to Abnormal heat and fire/ Glow wire test (IS : 14772-2000)	Parts of insulating materials which might be exposed to thermal stresses due to electric effects shall not be affected by abnormal heat and by fire. The compliance shall be checked by means of the glow wire test performed at 960 deg C, according to IS 11000(Part 2/sec 1) with no flame and glowing.
			7	Resistance to Tracking (IS 14772-2000)	The sample when tested as per clause no 17 of IS: 14772, shall show no flashover after completion.
			8	Flammability test (IS : 11731 (Part II)-1986)/UL :94)	The sample shall comply to flammability requirements of category FV0/V0 as per respective standards
			9	Test for self-extinguishing property (IS:4249-1967)	The sample when tested as per clause 3.5.1 of IS 4249, shall comply to the specified requirements.
			10	Test for water absorption (IS: 5133 (Part II)-1969)	The sample shall be heated to a temperature of 50 ± 3 deg. C for 24 h, as per IS and after completion, the water absorbed should not be more than 1%.
			11	Verification of Die-electric properties (IS :8623 (Part I)-1993)	The enclosure shall be tested as per clause no 8.2.2 of IS 8623(Part 1), with test voltage of 5 kV for 1 minute and withstand it satisfactorily.
			12	UV Light Exposure (UL-746C)	The sample when exposed to UV light as per the defined test method, shall comply to following **a) Physical Properties:** The average value of physical properties after the UV light exposure shall not be lower than 70% of its initial value

Property of TPC – Not to be reproduced without permission of TPC

					(without UV aging) i.e. the variation shall not be more than 30%. **b) Flammability Test :** After the UV light exposure, the flammability requirement of FV0 shall remain unchanged**.** c) **Flexural Strength**: After the UV light exposure, Flexural strength shall not be lower than 70% of its initial value (without UV aging) i.e. the variation shall not be more than 30 %.	
7.2	**Routine tests**	1. Marking 2. Visual Examination and Dimensions 3. Protection against electric shock 4. Provision for earthing				
7.3	**Acceptance Tests**	1. Marking 2. Visual Examination and Dimensions 3. Protection against electric shock 4. Provision for earthing 5. Mechanical strength/Impact Resistance Test 6. Resistance to Abnormal heat and fire/ Glow wire test 7. Flammability test 8. Verification of Die-electric properties 9. Finishing of box				
8.0	**TYPE TEST CERTIFICATES**	The bidder shall furnish the type test certificates for the tests as mentioned above as per the corresponding standards. All the tests shall be conducted at CPRI/ERDA/UL or equivalent as per the relevant standards. Type tests should have been conducted in certified Test laboratories during the period not exceeding 5 years from the date of opening the bid. In the event of any discrepancy in the test reports, i.e. any test report not acceptable, same shall be carried out without any cost implication to the Purchaser.				
9.0	**PRE-DISPATCH INSPECTION**	The successful bidder shall submit one pre-manufacturing sample samples (non-returnable) for further testing and compliance as per specifications and should get approval from TPC before mass manufacturing. Equipment shall be subject to inspection by a duly authorized representative of the Purchaser. Inspection may be made at any stage of manufacture at the option of the purchaser and the equipment if found unsatisfactory as to workmanship or material, the same is liable to rejection. Bidder shall grant free access to the places of manufacture to the Purchaser's representatives at all times when the work is in progress. Inspection by the Purchaser or it's authorized representatives shall not relieve the supplier of his obligation of furnishing equipment in accordance with the specifications. Material shall be dispatched after specific MDCC (Material Dispatch Clearance Certificate) is issued				

Property of TPC – Not to be reproduced without permission of TPC

		by the Purchaser. Following documents shall be sent along with material : a) Test reports b) MDCC issued by Purchaser c) Invoice in duplicate d) Packing list e) Drawings & catalogue f) Guarantee / Warrantee card g) Delivery Challan h) Other Documents (as applicable)
10.0	**INSPECTION AFTER RECEIPT AT STORE**	The material received at Purchaser's store shall be inspected for acceptance and shall be liable for rejection, if found different from the reports of the pre-dispatch inspection and one copy of the report shall be sent to Engineering department. TPC can send any of the supplied material for further testing at any lab for compliance of material in line with the specifications and the material shall be liable for rejection, if test results are found different from the reports of the pre-dispatch inspection or tender test reports.
11.0	**GUARANTEE**	Bidder shall stand guarantee towards design, materials, workmanship & quality of process/manufacturing of items under the contract for due and intended performance of the same, as an integrated product delivered under this contract. In the event any defect is found by the Purchaser up to a period of 60 months from the date of commissioning or 66 months from the date of last supplies made under the contract, whichever is earlier. Bidder shall be liable to undertake to replace/rectify such defects at his own costs, within mutually agreed timeframe, and to the entire satisfaction of the Purchaser, failing which the Purchaser will be at liberty to get it replaced/rectified at Bidder's risks and costs and recover all such expenses plus the Purchaser's own charges (@ 20% of expenses incurred), from the Bidder or from the "Security cum performance Deposit" as the case may be. In case box fails within the guarantee period, the purchaser will immediately inform the bidder who shall take back the failed box within 15 days from the date of intimation at his own cost and replace/repair the box within forty five days of date of intimation with a roll over guarantee. Bidder shall further be responsible for 'free replacement' for another period of THREE years from the end of the guarantee period for any 'Latent Defects' if noticed and reported by the Purchaser.
12.0	**PACKING**	Bidder shall ensure that all the equipment covered under this specification shall be prepared for rail/road transport in a manner so as to protect the equipment from damage in transit. The material used for packing shall be environmentally friendly.
13.0	**TENDER SAMPLE**	Bidders are required to manufacture two sample boxes as per the TPCODL specification and submit the sample boxes along with the bid for further testing and approval of samples. These samples shall be retained till the final PO placed against tender and for successful bidder these shall be retained till final supply against order.
14.0	**QUALITY CONTROL**	The bidder shall submit with the offer Quality assurance plan indicating the various stages of inspection, the tests and checks which will be carried out on the material of construction, components during manufacture and bought out items and fully assembled component and equipment after finishing. As part of the plan, a schedule for stage and final inspection within the parameters of the delivery schedule shall be

Property of TPC – Not to be reproduced without permission of TPC

<table>
<tr><td></td><td></td><td>furnished. The Purchaser’s engineer or its nominated representative shall have free access to the manufacturer’s/sub-supplier’s works to carry out inspections.</td></tr>
<tr><td>15.0</td><td>MINIMUM TESTING FACILITIES</td><td>Bidder shall have adequate in house testing facilities for carrying out all routine tests, acceptance tests as per Indian/International standards.</td></tr>
<tr><td>16.0</td><td>MANUFACTURING ACTIVITIES</td><td>The successful bidder will have to submit the bar chart for various manufacturing activities clearly elaborating each stage, with quantity. This bar chart should be in line with the Quality assurance plan submitted with the offer. This bar chart will have to be submitted within 15 days from the release of the order.</td></tr>
<tr><td>17.0</td><td>SPARES, ACCESSORIES AND TOOLS</td><td>Not applicable</td></tr>
<tr><td>18.0</td><td>DRAWING AND DOCUMENTS</td><td>Following drawings and documents shall be prepared based on Purchaser specifications and statutory requirements and shall be submitted with the bid :
a) Completely filled in Technical Particulars
b) General description of the equipment and all components including brochures
c) General arrangement for meter box
d) Experience List
e) Type test certificates

After the award of the contract, four (4) copies of following drawings, drawn to scale, describing the equipment in detail shall be forwarded for approval.

<table>
<tr><th>Sr. No.</th><th>Description</th><th>For Approval</th><th>For Review Information</th><th>Final Submission</th></tr>
<tr><td>1</td><td>Technical Parameters</td><td>✓</td><td></td><td>✓</td></tr>
<tr><td>2</td><td>GA Drawing of meter box</td><td>✓</td><td></td><td>✓</td></tr>
<tr><td>3</td><td>Installation Instruction</td><td></td><td></td><td>✓</td></tr>
<tr><td>4</td><td>Manual/Catalogues</td><td></td><td>✓</td><td></td></tr>
<tr><td>5</td><td>Transport/ Shipping dimension drawing</td><td></td><td>✓</td><td>✓</td></tr>
<tr><td>6</td><td>QA & QC Plan</td><td>✓</td><td>✓</td><td>✓</td></tr>
<tr><td>7</td><td>Test Certificates</td><td>✓</td><td>✓</td><td>✓</td></tr>
</table>

Bidder shall subsequently provide Four (4) complete sets of final drawings, one of which shall be auto positive suitable for reproduction, before the dispatch of the equipment. Soft copy (Compact Disk CD) of all the drawing, GTP, Test certificates shall be submitted after the final approval of the same to purchaser.
All the documents & drawings shall be in English language.
Instruction Manual (in English language) covering erection and maintenance instructions and all relevant information and drawings pertaining to the main equipment</td></tr>
</table>

Property of TPC – Not to be reproduced without permission of TPC

<table>
<tr><td></td><td></td><td>as well as auxiliary devices.</td></tr>
<tr><td>19.0</td><td>GUARANTEED TECHNICAL PARTICULARS</td><td>
<table>
<tr><th>Sl. No.</th><th>Description</th><th>Unit</th><th>As furnished by Bidder</th></tr>
<tr><td>1</td><td>Application</td><td></td><td></td></tr>
<tr><td>2</td><td>Degree of protection</td><td></td><td></td></tr>
<tr><td>3</td><td>Flammability requirement</td><td></td><td></td></tr>
<tr><td>4</td><td>Grade of material</td><td></td><td></td></tr>
<tr><td>5</td><td>Material
a) Base :
b) Cover :</td><td></td><td></td></tr>
<tr><td>6</td><td>Thickness of box (Base and Cover)</td><td>mm</td><td></td></tr>
<tr><td>7</td><td>Material of the gasket</td><td></td><td></td></tr>
<tr><td>8</td><td>Material withstand temperature</td><td>deg. C</td><td></td></tr>
<tr><td>9</td><td>Dielectric withstand capacity</td><td></td><td></td></tr>
<tr><td>10</td><td>Construction features of the box</td><td></td><td></td></tr>
<tr><td>a)</td><td>Clear inside dimensions of meter box
i. Length
ii. Width
iii. Depth</td><td>
mm
mm
mm</td><td></td></tr>
<tr><td>b)</td><td>Minimum clearance between meter and box on all 4 sides</td><td>mm</td><td></td></tr>
<tr><td>c)</td><td>Minimum clearance from meter on front</td><td>mm</td><td></td></tr>
<tr><td>d)</td><td>Minimum clearance from back of meter</td><td>mm</td><td></td></tr>
<tr><td>e)</td><td>Earthing arrangement</td><td>Numbers</td><td></td></tr>
<tr><td>f)</td><td>Sealing Arrangement (with length)</td><td>Numbers</td><td></td></tr>
</table>
</td></tr>
</table>

Property of TPC – Not to be reproduced without permission of TPC

		g)	Colour of Meter Box (base & cover)			
		h)	Box mounting arrangement			
		i)	Size of incoming & outgoing cable hole and location of hole	Cable size		
		j)	Weight of complete box in kg with +/- tolerance	kg		
		k)	Whether recyclable material	Yes/no		
		l)	Number Gitti and screws provided	Number		
		m)	MS plate for meter mounting provided			
		n)	Number of male female Lock with length	Number & mm		
		o)	Angle of Box opening	degree		
		p)	Sealing hole to be provided in clamp and latches			
		q)	Overlapping of cover on base	mm		
		r)	Number and size of earthing bolt	Number & mm		
		s)	Location of earthing bolt at Sides			
		t)	Earthing sign to be provided near bolt			
		u)	Gland size i/c and o/g			
		11	Name plate and marking as per Cl.no- 6.0			
		12	Type test as per cl. No-7.1			
20.0	**SCHEDULE OF DEVIATION**	The bidders shall set out all deviations from this specification, Clause by Clause in this schedule. Unless specifically mentioned in this schedule, the tender shall be deemed to confirm the purchaser's specifications. **(TO BE ENCLOSED WITH THE BID)**				

Property of TPC – Not to be reproduced without permission of TPC

All deviations from this specification shall be set out by the bidders, clause by Clause in this schedule. Unless specifically mentioned in this Schedule, the tender shall be deemed to confirm the purchaser's specifications:

S.No.	Clause No.	Details of deviation with justifications

We confirm that there are no deviations apart from those detailed above.

Seal of the Company Signature :

Designation :

Property of TPC – Not to be reproduced without permission of TPC

	THE TATA POWER COMPANY LIMITED		
	TECHNICAL SPECIFICATION		
Document Title	SPECIFICATION FOR THREE PHASE METER BOX		
Document No.	ENG-LV-52		Eff. Date 01.05.20
Revision No.	00		Page 1 of 19
Prepared By: TPC	Reviewed By: TPC	Approved By: TPC	Issued By: TPC

CONTENTS

1.0 SCOPE

2.0 APPLICABLE STANDARDS

3.0 CLIMATIC CONDITIONS OF THE INSTALLATION

4.0 GENERAL TECHNICAL REQUIREMENTS

5.0 GENERAL CONSTRUCTIONS

6.0 NAME PLATE AND MARKING

7.0 TESTS

8.0 TYPE TEST CERTIFICATES

9.0 PRE-DESPATCH INSPECTION

10.0 INSPECTION AFTER RECEIPT AT STORE

11.0 GUARANTEE

12.0 PACKING

13.0 TENDER SAMPLE

14.0 QUALITY CONTROL

15.0 MINIMUM TESTING FACILITIES

16.0 MANUFACTURING ACTIVITIES

17.0 SPARES,ACCESSORIES AND TOOLS

18.0 DRAWING AND DOCUMENTS

19.0 GURANTEED TECHNICAL PARTICULARS

20.0 SCHEDULE OF DEVIATIONS

Initiator		HOG (Engineering)	

Property of TPC – Not to be reproduced without permission of TPC

1.0 SCOPE

This specification covers the technical requirements of design, manufacture, testing at manufacturer's works, packing, forwarding, supply and unloading at store/site and performance of three phase meter box with all accessories for trouble free and efficient operation.

2.0 APPLICABLE STANDARDS

The equipment covered by this specification shall unless otherwise stated, be designed, manufactured and tested in accordance with the latest editions of the following Indian/International standards and shall conform to the regulations of the local statutory authorities.

IS: 14772-2000	General requirements for enclosure for accessories for household and similar fixed electrical installations-Specification
IS: 8623(Part 1)-1993	Specification for low-voltage switchgear and control gear assemblies Part 1 for type tested and partially type tested assemblies
IS: 11731(Part II)-1992	Methods of test for determination of Flammability of solid electrical insulating materials when exposed to an igniting source
IS 4249-1967	Specification for classification and method of test for non-ignitable and self-extinguishing properties of solid electrical insulating materials
IS 8828-1996	Electrical Accessories- Circuit Breakers for Over Current Protection for Household and Similar Installations
IS 5133(Part II)-1969	Specification for boxes for the enclosure of electrical accessories
IS 2500(Part 1)-2000	Sampling procedure for inspection by attributes part 1 sampling schemes indexed by acceptance quality limit (AQL) for lot-by-lot inspection
UL 746-C	Polymeric materials in electrical equipments

3.0 CLIMATIC CONDITIONS OF THE INSTALLATION

The atmosphere is generally laden with mild acid and dust suspended during dry months and subjected to fog in cold months. The design of the equipment and accessories shall be suitable to withstand seismic forces corresponding to an acceleration of 0.1g.

a) Max. Ambient Température : 50 deg.C
b) Max. Daily average ambient temp. : 40 deg.C
c) Min Ambient Temp : 0 deg C
d) Maximum Humidity : 95%
e) Minimum Humidity : 10%
f) Average No. of thunderstorm days per annum : 50
g) Average Annual Rainfall : 750 mm
h) Average No. of rainy days per annum : 60
i) Rainy months : June to Oct.
j) Altitude above MSL not exceeding : 300 meters
k) Wind Pressure of : 126kg/sq m up to an elevation 10mtrs

The atmosphere is generally laden with mild acid and dust suspended during

Property of TPC – Not to be reproduced without permission of TPC

		dry months and subjected to fog in cold months. The design of the equipment and accessories shall be suitable to withstand seismic forces corresponding to an acceleration of 0.1g

4.0 GENERAL TECHNICAL REQUIREMENTS

Sl. No.	Description /Requirements	TPC clarification
1	Application	Outdoor
2	Degree of protection	IP55
3	Flammability requirement	FV0
4	Grade of material	fire retardant, self-extinguishing, UV stabilization and Anti oxidation properties
5	Material a) Base : b) Cover :	 a. Dark Gray- Polycarbonate b. Clear transparent- Polycarbonate
6	Thickness of box (Base and Cover)	Base-3 mm (minimum) Cover-2.5mm (Minimum) Tolerance ± 0.02mm
7	Material of the gasket	Rubber or better
8	Glow wire tested at	960˚C
9	Dielectric withstand capacity	5kV for 1 min.
10	Construction features of the box	
a)	**Clear inside dimensions** of meter box i. Length ii. Width iii. Depth	 460mm 340mm 170mm With 2% tolerance (With minimum clear space of 450x330 without any tolerance)
b)	Minimum clearance between meter and box on all sides	50 mm
c)	Min. Clearance from meter on Top of meter mounting plate	35mm
d)	Minimum clearance from back of meter to base	10 mm
e)	Earthing arrangement Nut & bolt	1 Numbers with M8x 35 or 40mm long
f)	Sealing Arrangement polycarbonate extension for sealing and latch with concentric sealing holes on U shaped latches	4 Numbers of Min. 30mm length (Two on opening side and one at top and bottom side) Sealing hole diameter 3mm
g)	U shaped GI latches	4 number GI U shape latches having 1.2mm thick and Min. 25mm long with sealing hole
h)	Box mounting arrangement	Provision for four number screws at four corners provided
i)	Box Mounting Screw	4 Number Gitti and screws provided with M6 Screw with min. length 40mm
j)	Cover overlapping on base base	a) Inside- 25 mm overlapping at hinges sides, top and bottom side and 20 mm overlapping at pad lock side.

Property of TPC – Not to be reproduced without permission of TPC

			b) Outside overlapping 20mm through out border
	k)	A. Size of incoming & outgoing gland hole B. location of hole from bottom side	A. 35mm B. around 40mm
	l)	Meter mounting plate as per clause no. 5.4	GI plate of 1.2m thick for meter mounting provided on Top side (without sharp corners)
	m)	Meter mounting Screws	Minimum 3 number of 13mm length
	n)	Hinges	Three nos. GI Hinges having 1.2 mm thickness and Minimum length 30 mm
	n)	Angle of Box opening	120 degree
	o)	Polycarbonate hinges on base are covered with box cover material such that tampering is not possible from outside	Yes/No
	p)	Antenna mounting provision	GI square piece of around 30x30mm to be riveted/ fixed inside on bottom face of box at around 60mm distance from right side
	s)	Location of earthing bolt	On left Sides (when viewed from front) & bolt is fixed & engaged within gland through GI sheet 1.2mm from inside.
	u)	Earthing sign	A tag with green background on GI sheet to be provided on earth bolt outside box
	v)	A. Gland size – inside diameter-around 29mm on i/c and o/g B. Gland type – straight	Yes/no
	11	The earth connectivity plate between incoming gland and earth bolt provided with 1.2mm thick GI	Yes/no

5.0 GENERAL CONSTRUCTIONS

5.1-The meter box shall be weather proof, tamper proof and shall be made of Injection moulded reinforce polycarbonate material with FV0 fire retardant, self-extinguishing, UV stabilization and Anti oxidation properties. The box shall be of adequate strength ,unbreakable and shall be made in two pieces(base and cover).
The base shall be dark grey color whereas the cover shall be completely transparent for polycarbonate material .The material for base and cover shall be polycarbonate with minimum cover thickens of 2.5mm & base -3 mm thickness.

5.2- The meter box shall have a taper roof for easy flow of rain water and shall have degree of IP55 for protection against dust and water.

5.3-The box shall be provided with meter mounting arrangement along with MS plate on top for mounting the meter from different manufacturers, having different mounting dimensions. The top MS plate shall be fixed on the base taking care of the alignment with the fixing holes provided in the base of the box. The box shall have suitable modem mounting arrangement on the right hand side in the base of meter box for mounting the modem from different manufacturers with the help of base plate. The location of the same shall be 100mm below the top of the box base (as measured from inside) and 35 mm away from right side of the box. The detail drawing of the mounting arrangement of

Property of TPC – Not to be reproduced without permission of TPC

		all the meters shall be provided to successful bidders by the TPPDL. 5.4- The meter shall be mounted with the help of MS plate such that there is clearance of 50 mm between the meter box and top of the cover. A minimum clearance of 50 mm shall be maintained on both sides, between meter and box. The overall dimensions of meter box shall be Length- 460 mm, Width- 340 mm ,Depth- 170 mm with 2% tolerance. 5.5- The design of the meter box shall be such as to easy facilitate easy wiring and access to meter terminals. Nylon gland of internal diameter of approx. 30 mm shall be provided for I/C and O/G cables of size 4Cx25 sq.mm or as approved by purchaser. The holes for I/C and O/G cables shall be provided in left and right side of meter box at bottom. 5.6- The number of pillers to be provided in box as per TPC different type of meters. If there is any change in existing meter design or new meter introduced, bidder shall provide meter mounting piller accordingly in meter box with modification in their mould without any extra cost. 5.7- The box cover shall be fixed to the base through three nos Hinges. The arrangement of the hinges shall be provided on left side of the box and shall be such as to avoid entry inside of the box. The screws shall not be fixed from outside so that it can not be visible from outside to avoid any manipulation. The box cover shall be open able by more than 120 degrees. 5.8- For holding and sealing the box, four U-shaped latches of approx..size 30 mm shall be provided on three side of box(two on right side and one each on top and bottom side).The latch shall be GS with minimum thickness of 1.2 mm. The latch shall be provided along with suitable clamp assembly in base as well as cover,such that these are fully covered by the latch after closing.The clamp along with the latch shall be provided with a sealing hole such as to provide a sealing arrangement in the assembly and alignment of holes should be perfect so that seal wire may be easily install. 5.9- Suitable rubber gasket of round shape (properly provided throughout the periphery) for protection all around the cover shall be provided. The box shall be provided with four fixing holes of M6 screws. The four nos M6 screw with gitti to be provided with each box. 5.10- After closing and sealing the meter box, it shall not be possible to forcefully enter any sharp object inside the box without breaking base/cover. Suitable overlapping as mentioned in GTP shall be provided between base and cover to avoid access to the meter or its accessories inside the meter box by any means after sealing the box. 5.11- Box shall be provided with 1 no. earthing nut and bolt of size M8x35 mm on the left hand side in the base of meter box for providing earth connection. The earth terminal shall be identified by means of the earth sign, marked in a legible manner on or adjacent the terminal.
6.0	**NAME PLATE AND MARKING**	The meter box shall be provided with durable and legible name plate, effectively secured against removal. Name plate shall be embossed with “PO No with date” , “PROPERTY OF TPC” , “ITEM CODE NUMBER” , The name plate shall be indelibly and distinctly marked with all essential particulars as per the relevant standards along with the

Property of TPC – Not to be reproduced without permission of TPC

		following information : a) Manufacturer's name b) Serial number c) Month and Year of manufacturing d) No supply number : 19124 e) Property of 'Tata Power Company' f) Voltage 440V Danger g) PO no. and date Danger logo/icon on the cover
7.0	**TESTS**	All routine, acceptance & type tests shall be carried out in accordance with the relevant IS/IEC. All routine & acceptance tests shall be witnessed by the purchaser/his authorized representative. All the components shall also be type tested as per the relevant standards. Following tests shall be necessarily conducted on the meter box in addition to others specified in IS/IEC standards.
7.1	**Type Test**	

S.no.	Tests/ Standard	Requirements
1	Protection against electric shock (IS : 14772 - 2000)	Enclosure shall be so designed that when they are mounted as for normal use, the live parts of any correctly installed accessories or any parts of these accessories which may become live due to a fault shall not be accessible.
2	Provision for earthing (IS : 14772-2000)	Enclosure shall be provided with a facility for permanent and reliable connection to earthing
3	Resistance to ageing, humid conditions, Ingress of solid objects and to harmful ingress of water (IS : 14772-2000)	**Resistance to Ageing :** Enclosure shall be kept in a heating cabinet with temp 70 ± 2 deg C for 7 days as per IS. After completion of the test, the enclosure shall not show any cracks. **Humid conditions :** Enclosure shall be kept in a cabinet with humidity between 91 to 95 % for 7 days as per IS. After completion of the test, the enclosure shall not show any cracks. **Resistance against ingress of solid objects and to harmful ingress of water :** Enclosure shall be subjected to test for degree of protection (IP 55) as per IS 12063/ IS 60529
4	Mechanical strength/ Impact Resistance Test (IS : 14772-2000)/(UL : 746 C)	The sample shall be subjected to Impact resistance test as per the respective standards and shall not show occurrence of any of the

Property of TPC – Not to be reproduced without permission of TPC

				following: making uninsulated live parts accessible to contact, producing a condition that might affect the mechanical performances of the enclosure, producing a condition that would increase the likelihood of an electric shock	
			5	Resistance to heat / Ball Pressure Test (IS : 14772-2000)	The test shall be made on a sample in a heating cabinet at a temp of 125 ±2 deg C for 1 per IS. After completion of test, the diameter of the impression caused by the ball shall be measured and should not exceed 2 mm.
			6	Resistance to Abnormal heat and fire/ Glow wire test (IS : 14772-2000)	Parts of insulating materials which might be exposed to thermal stresses due to electric effects shall not be affected by abnormal heat and by fire. The compliance shall be checked by means of the glow wire test performed at 960 deg C, according to IS 11000(Part 2/sec 1) with no flame and glowing.
			7	Resistance to Tracking (IS 14772-2000)	The sample when tested as per clause no 17 of IS: 14772, shall show no flashover after completion.
			8	Flammability test (IS : 11731 (Part II)-1986)/UL :94)	The sample shall comply to flammability requirements of category FV0/V0 as per respective standards
			9	Test for self-extinguishing property (IS:4249-1967)	The sample when tested as per clause 3.5.1 of IS 4249, shall comply to the specified requirements.
			10	Test for water absorption (IS: 5133 (Part II)-1969)	The sample shall be heated to a temperature of 50 ± 3 deg. C for 24 h, as per IS and after completion, the water absorbed should not be more than 1%.
			11	Verification of Die-electric properties (IS :8623 (Part I)-1993)	The enclosure shall be tested as per clause no 8.2.2 of IS 8623(Part 1), with test voltage of 5 kV for 1 minute and withstand it satisfactorily.
			12	UV Light Exposure (UL-746C)	The sample when exposed to UV light as per the defined test method, shall comply to following **a) Physical Properties:** The average value of physical properties after the UV light exposure shall not be lower

Property of TPC – Not to be reproduced without permission of TPC

				than 70% of its initial value (without UV aging) i.e. the variation shall not be more than 30%. **b) Flammability Test :** After the UV light exposure, the flammability requirement of FV0 shall remain unchanged**.** c) **Flexural Strength**: After the UV light exposure, Flexural strength shall not be lower than 70% of its initial value (without UV aging) i.e. the variation shall not be more than 30 %.	
7.2	**Routine tests**	1. Marking 2. Visual Examination and Dimensions 3. Protection against electric shock 4. Provision for earthing			
7.3	**Acceptance Tests**	1. Marking 2. Visual Examination and Dimensions 3. Protection against electric shock 4. Provision for earthing 5. Mechanical strength/Impact Resistance Test 6. Resistance to Abnormal heat and fire/ Glow wire test 7. Flammability test 8. Verification of Die-electric properties 9. Finishing of box 10. Screw Driver penetration test			
8.0	**TYPE TEST CERTIFICATES**	The bidder shall furnish the type test certificates for the tests as mentioned above as per the corresponding standards. All the tests shall be conducted at CPRI/ERDA/UL or equivalent as per the relevant standards. Type tests should have been conducted in certified Test laboratories during the period not exceeding 5 years from the date of opening the bid. In the event of any discrepancy in the test reports, i.e. any test report not acceptable, same shall be carried out without any cost implication to the Purchaser.			
9.0	**PRE-DISPATCH INSPECTION**	The successful bidder shall submit two pre-manufacturing sample samples (non-returnable) for further testing and compliance as per specifications and should get approval from TPC before mass manufacturing. The sample to be submitted one at Meter test Lab, Sec-13, Rohini and one at Engineering Lab, CENPEID, Sec-11, Rohini Equipment shall be subject to inspection by a duly authorized representative of the Purchaser. Inspection may be made at any stage of manufacture at the option of the purchaser and the equipment if found unsatisfactory as to workmanship or material, the same is liable to rejection. Bidder shall grant free access to the places of manufacture to the Purchaser's representatives at all times when the work is in progress. Inspection by the			

Property of TPC – Not to be reproduced without permission of TPC

		Purchaser or it's authorized representatives shall not relieve the supplier of his obligation of furnishing equipment in accordance with the specifications. Material shall be dispatched after specific MDCC (Material Dispatch Clearance Certificate) is issued by the Purchaser. Following documents shall be sent along with material : a) Test reports b) MDCC issued by Purchaser c) Invoice in duplicate d) Packing list e) Drawings & catalogue f) Guarantee / Warrantee card g) Delivery Challan h) Other Documents (as applicable)
10.0	**INSPECTION AFTER RECEIPT AT STORE**	The material received at Purchaser's store shall be inspected for acceptance and shall be liable for rejection, if found different from the reports of the pre-dispatch inspection and one copy of the report shall be sent to Engineering department. TPC can send any of the supplied material for further testing at any lab for compliance of material in line with the specifications and the material shall be liable for rejection, if test results are found different from the reports of the pre-dispatch inspection or tender test reports.
11.0	**GUARANTEE**	Bidder shall stand guarantee towards design, materials, workmanship & quality of process/manufacturing of items under the contract for due and intended performance of the same, as an integrated product delivered under this contract. In the event any defect is found by the Purchaser up to a period of 60 months from the date of commissioning or 66 months from the date of last supplies made under the contract, whichever is earlier. Bidder shall be liable to undertake to replace/rectify such defects at his own costs, within mutually agreed timeframe, and to the entire satisfaction of the Purchaser, failing which the Purchaser will be at liberty to get it replaced/rectified at Bidder's risks and costs and recover all such expenses plus the Purchaser's own charges (@ 20% of expenses incurred), from the Bidder or from the "Security cum performance Deposit" as the case may be. In case box fails within the guarantee period, the purchaser will immediately inform the bidder who shall take back the failed box within 15 days from the date of intimation at his own cost and replace/repair the box within forty five days of date of intimation with a roll over guarantee. Bidder shall further be responsible for 'free replacement' for another period of THREE years from the end of the guarantee period for any 'Latent Defects' if noticed and reported by the Purchaser.
12.0	**PACKING**	Bidder shall ensure that all the equipment covered under this specification shall be prepared for rail/road transport in a manner so as to protect the equipment from damage in transit. The material used for packing shall be environmentally friendly.
13.0	**TENDER SAMPLE**	Bidders are required to manufacture two sample boxes as per the TPC specification and submit sample boxes along with the bid one sample at Meter test Lab, Rohini Sector-13 and other sample at Engineering Lab, CENPEID, Rohini Sec-11 for further testing and approval of samples. These samples shall be retained till the final PO placed against tender and for successful bidder these shall be retained till final supply against order.
14.0	**QUALITY CONTROL**	The bidder shall submit with the offer Quality assurance plan indicating the various stages of inspection, the tests and checks which will be carried out on the material of

Property of TPC – Not to be reproduced without permission of TPC

<table>
<tr><td></td><td></td><td>construction, components during manufacture and bought out items and fully assembled component and equipment after finishing. As part of the plan, a schedule for stage and final inspection within the parameters of the delivery schedule shall be furnished. The Purchaser’s engineer or its nominated representative shall have free access to the manufacturer’s/sub-supplier’s works to carry out inspections.</td></tr>
<tr><td>15.0</td><td>MINIMUM TESTING FACILITIES</td><td>Bidder shall have adequate in house testing facilities for carrying out all routine tests, acceptance tests as per Indian/International standards.</td></tr>
<tr><td>16.0</td><td>MANUFACTURING ACTIVITIES</td><td>The successful bidder will have to submit the bar chart for various manufacturing activities clearly elaborating each stage, with quantity. This bar chart should be in line with the Quality assurance plan submitted with the offer. This bar chart will have to be submitted within 15 days from the release of the order.</td></tr>
<tr><td>17.0</td><td>SPARES, ACCESSORIES AND TOOLS</td><td>04 nos M6 screws with Gitti</td></tr>
<tr><td>18.0</td><td>DRAWING AND DOCUMENTS</td><td>Following drawings and documents shall be prepared based on Purchaser specifications and statutory requirements and shall be submitted with the bid :
a) Completely filled in Technical Particulars
b) General description of the equipment and all components including brochures
c) General arrangement for meter box
d) Experience List
e) Type test certificates

After the award of the contract, soft copies of following drawings, drawn to scale, describing the equipment in detail shall be forwarded for approval.

<table>
<tr><th>Sr. No.</th><th>Description</th><th>For Approval</th><th>For Review Information</th><th>Final Submission</th></tr>
<tr><td>1</td><td>Technical Parameters</td><td>✓</td><td></td><td>✓</td></tr>
<tr><td>2</td><td>GA Drawing of meter box</td><td>✓</td><td></td><td>✓</td></tr>
<tr><td>3</td><td>Installation Instruction</td><td></td><td></td><td>✓</td></tr>
<tr><td>4</td><td>Manual/Catalogues</td><td></td><td>✓</td><td></td></tr>
<tr><td>5</td><td>Transport/ Shipping dimension drawing</td><td></td><td>✓</td><td>✓</td></tr>
<tr><td>6</td><td>QA & QC Plan</td><td>✓</td><td>✓</td><td>✓</td></tr>
<tr><td>7</td><td>Test Certificates</td><td>✓</td><td>✓</td><td>✓</td></tr>
</table>

Bidder shall subsequently provide of all the drawing, GTP, Test certificates shall be submitted after RC for the final approval of TPC.
All the documents & drawings shall be in English language.</td></tr>
</table>

Property of TPC – Not to be reproduced without permission of TPC

19.0 GUARANTEED TECHNICAL PARTICULARS

Sl. No.	Description /Requirements	TPC Requirements	Offered by Bidder
1	Application	Outdoor	
2	Degree of protection	IP55	
3	Flammability requirement	FV0	
4	Grade of material	fire retardant, self-extinguishing, UV stabilization and Anti oxidation properties	
5	Material a) Base : b) Cover :	a. Dark Gray-Polycarbonate b. Clear transparent-Polycarbonate	
6	Thickness of box (Base and Cover)	Base-3 mm (minimum) Cover-2.5mm (Minimum) Tolerance ± 0.02mm	
7	Material of the gasket	Rubber or better	
8	Glow wire tested at	960˚C	
9	Dielectric withstand capacity	5kV for 1 min.	
10	Construction features of the box		
a)	**Clear inside dimensions** i. Length ii. Width iii. Depth	 460mm 340mm 170mm With 2% tolerance (With minimum clear space of 450x330 without any tolerance)	
b)	Minimum clearance between meter and box on all sides	50 mm	
c)	Min. Clearance from meter on Top of meter mounting plate	35mm	
d)	Minimum clearance from back of meter to base	10 mm	
e)	Earthing arrangement Nut & bolt	1 Numbers with M8x 35 or 40mm long	
f)	Sealing Arrangement polycarbonate extension for sealing and latch with concentric sealing holes on U shaped latches	4 Numbers of Min. 30mm length (Two on opening side and one at top and bottom side) Sealing hole diameter 3mm	

Property of TPC – Not to be reproduced without permission of TPC

		g)	U shaped GI latches	4 number GI U shape latches having 1.2mm thick and Min. 25mm long with sealing hole		
		h)	Box mounting arrangement	Provision for four number screws at four corners provided		
		i)	Box Mounting Screw	4 Number Gitti and screws provided with M6 Screw with min. length 40mm		
		j)	Cover overlapping on base base	a) Inside- 25 mm overlapping at hinges sides, top and bottom side and 20 mm overlapping at pad lock side. b) Outside overlapping 20mm through out border		
		k)	A. Size of incoming & outgoing gland hole B. location of hole from bottom side	A. 35mm B. around 40mm		
		l)	Meter mounting plate as per clause no. 5.4	GI plate of 1.2m thick for meter mounting provided on Top side (without sharp corners)		
		m)	Meter mounting Screws	Minimum 3 number of 13mm length		
		n)	Hinges	Three nos. GI Hinges having 1.2 mm thickness and Minimum length 30 mm		
		n)	Angle of Box opening	120 degree		
		o)	Polycarbonate hinges on base are covered with box cover material such that tampering is not possible from outside	Yes/No		
		p)	Antenna mounting provision	GI square piece of around 30x30mm to be riveted/ fixed inside on bottom face of box at around 60mm distance from right side		
		s)	Location of earthing bolt	On left Sides (when viewed from front) & bolt is fixed & engaged within gland through GI sheet 1.2mm from inside.		
		u)	Earthing sign	A tag with green background on GI sheet to be provided on earth bolt outside box		
		v)	A. Gland size – inside diameter-around 29mm on i/c and o/g B. Gland type – straight	Yes/no		
		11	Name plate and marking as per Cl.no- 6.0 with danger icon	Yes/no		

Property of TPC – Not to be reproduced without permission of TPC

12	Type test as per cl. No-7.1	Yes or undertaking to conduct before supply	
14	The earth connectivity plate between incoming gland and earth bolt provided with 1.2mm thick GI	Yes/no	
16	Mounting pillars as per attached drawings Annex-1 to provided. And any mounting pillar changes in future as per prevailing meters & TPC requirements will be provided.	Yes/no	
17	The prototype samples shall be approved before mass manufacturing	Yes/no	
18	Screw driver test shall be performed in acceptance test to ensure no entry of external object.	Acceptance	

20.0	**SCHEDULE OF DEVIATION**	The bidders shall set out all deviations from this specification, Clause by Clause in this schedule. Unless specifically mentioned in this schedule, the tender shall be deemed to confirm the purchaser's specifications. **(TO BE ENCLOSED WITH THE BID)** All deviations from this specification shall be set out by the bidders, clause by Clause in this schedule. Unless specifically mentioned in this Schedule, the tender shall be deemed to confirm the purchaser's specifications:

S.No.	Clause No.	Details of deviation with justifications

We confirm that there are no deviations apart from those detailed above.

Property of TPC – Not to be reproduced without permission of TPC

		Seal of the Company	Signature : Designation :

Property of TPC – Not to be reproduced without permission of TPC

Annexure-1 - Mounting dimensions of meters

1. A make

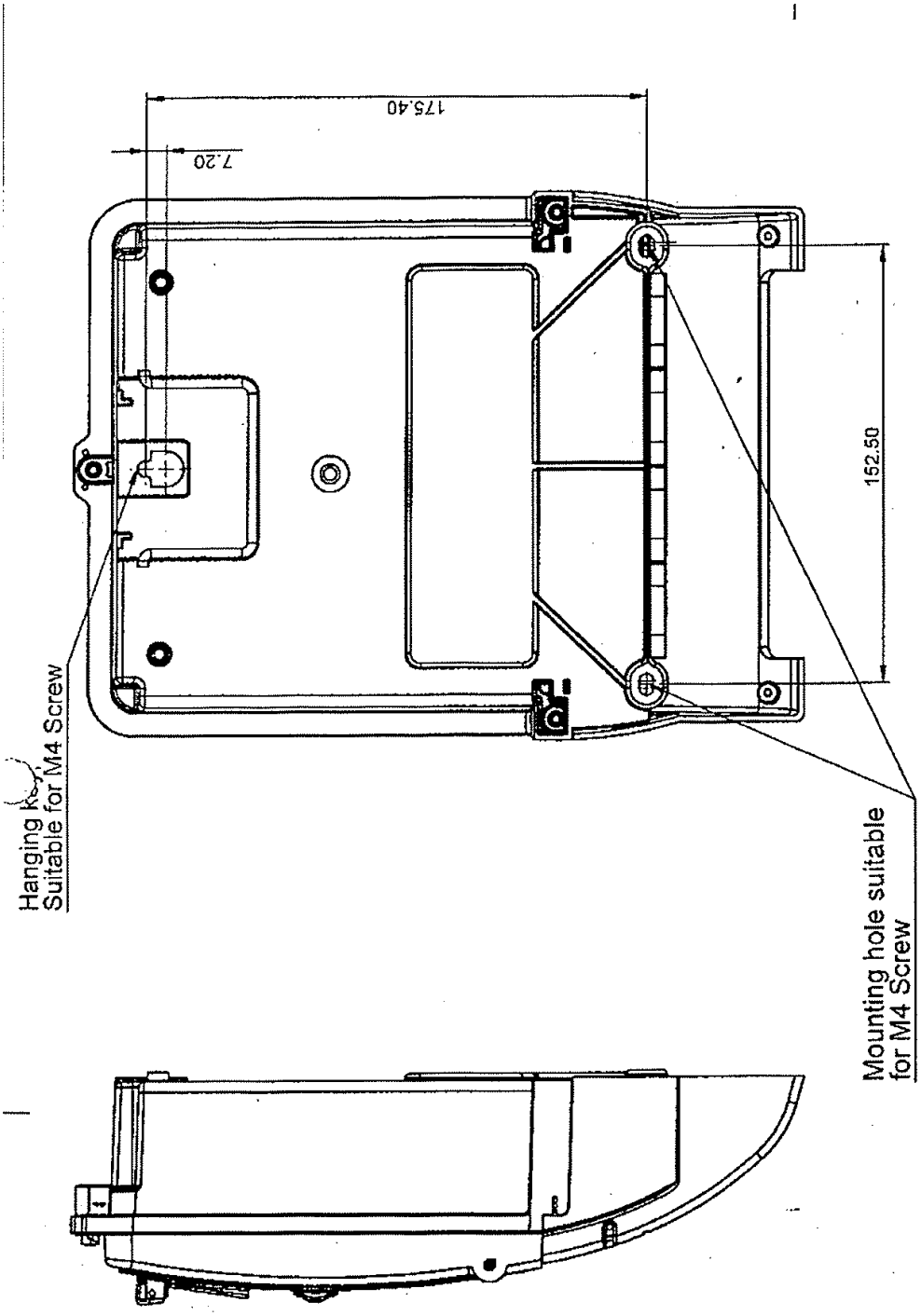

2. B make

Property of TPC – Not to be reproduced without permission of TPC

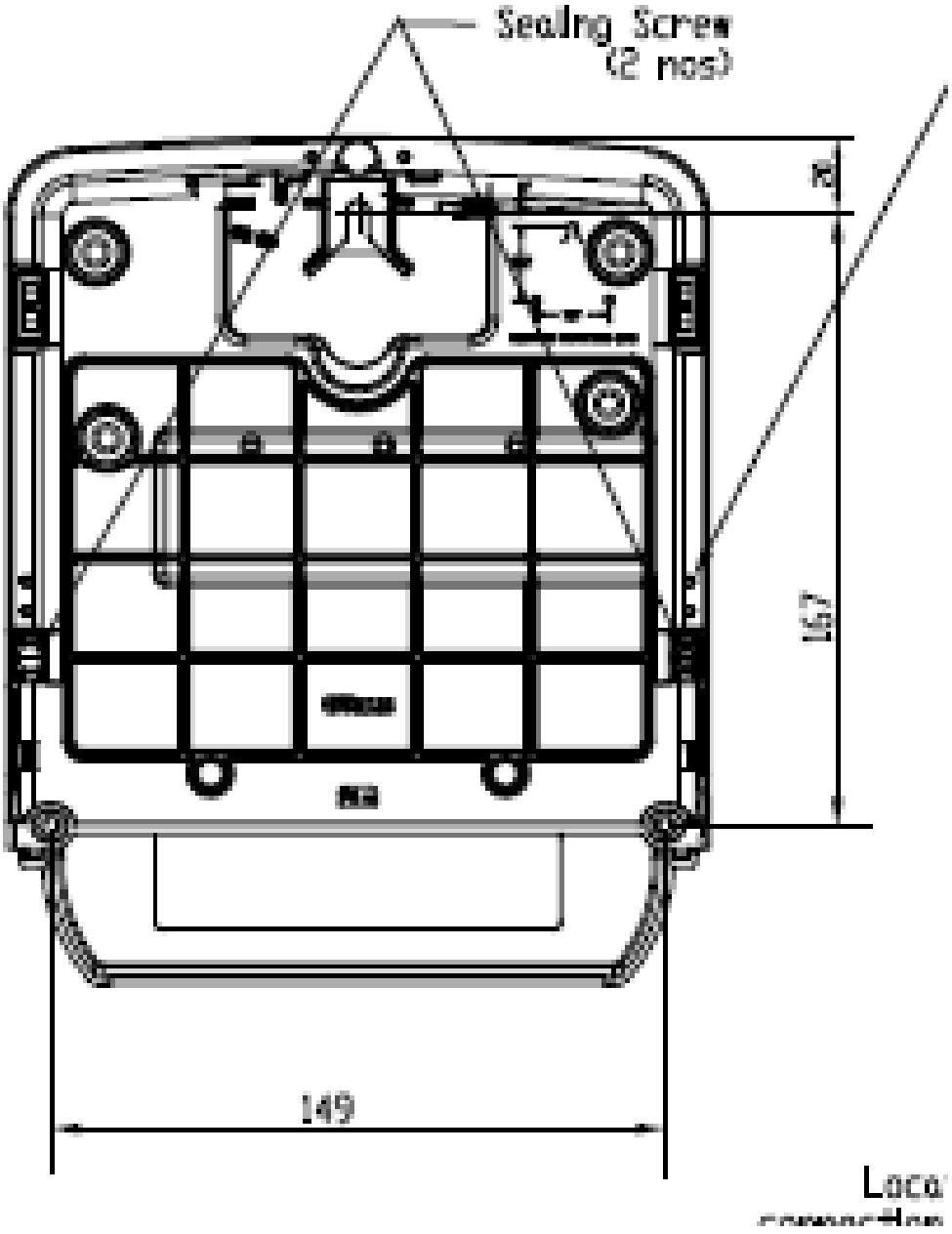

3. C make

Property of TPC – Not to be reproduced without permission of TPC

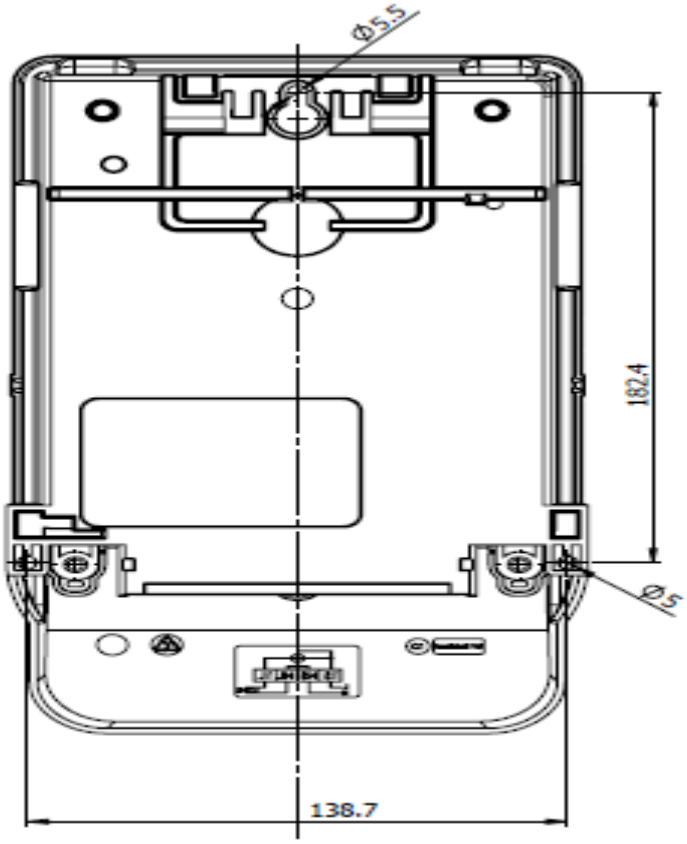

4. D make

Property of TPC – Not to be reproduced without permission of TPC

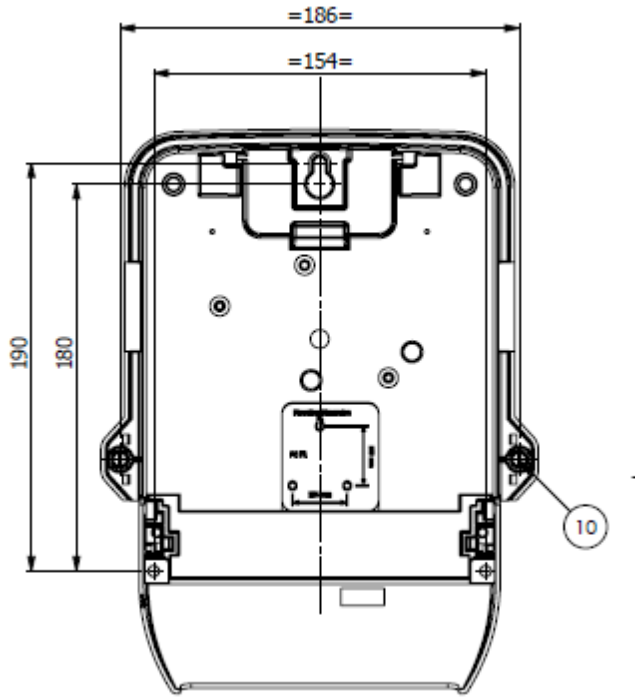

5. E make

Property of TPC – Not to be reproduced without permission of TPC

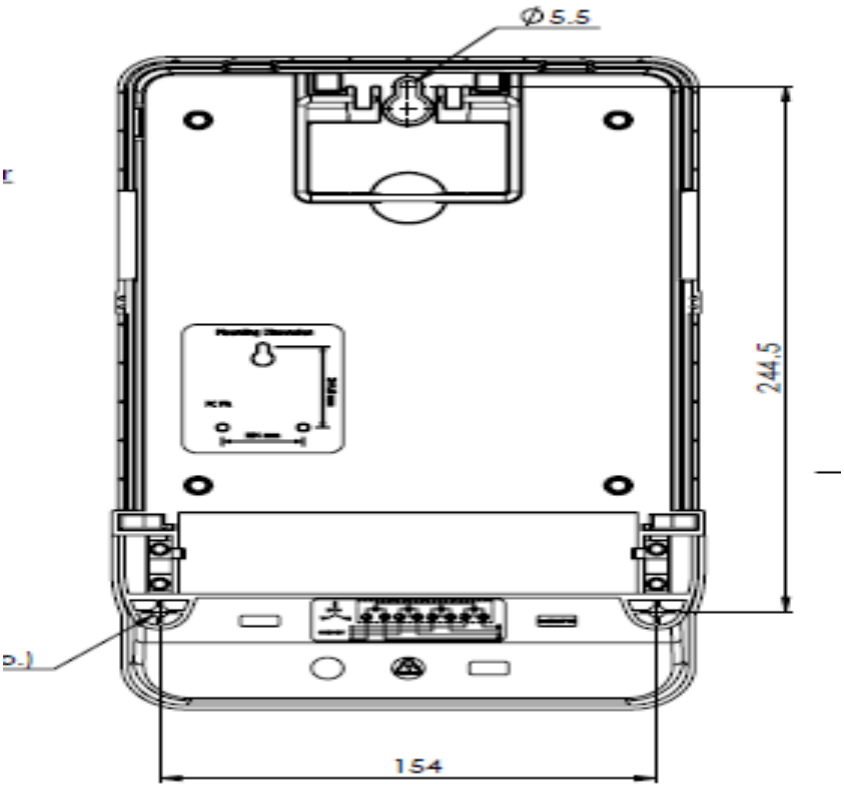

6. F make

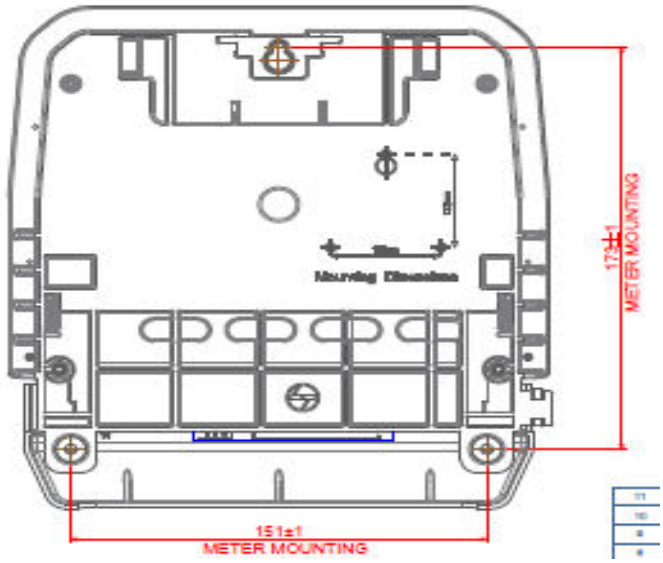

Property of TPC – Not to be reproduced without permission of TPC

GCC-Supply (Annexure to Tender Documents)

CONFIDENTIAL

CONTENTS	
CLAUSE NO.	**DESCRIPTION**
1.0	**ORGANIZATIONAL VALUES**
2.0	**ETHICS**
2.1	Tata Code of Conduct
3.0	**CONTRACT PARAMETERS**
3.1	Issue/Award of Contract
3.2	Contract Commencement Date
3.3	Contract Completion Date
3.4	Contract Period/ Time
3.5	Contract Execution Completion Date
3.6	Contract Price /Value
3.7	Contract Document
3.8	Contract Language
3.9	Reverse Auction
4.0	**SCOPE OF WORK**
4.1	Bid Evaluation- Commercial & Technical
5.0	**PRICES/RATES/TAXES**
5.1	Changes in statutory Tax Structure
6.0	**TERMS OF PAYMENT**
6.1	Quantity Variation
6.2	Full and Final Payment
7.0	**MODE OF PAYMENT**
8.0	**SECURITY CUM PERFORMANCE DEPOSIT**
9.0	**STATUTORY COMPLIANCE**
9.1	Compliance to Various Acts
9.2	SA 8000
9.3	Affirmative Action
9.4	MSME Development Act 2006
9.5	ISO 14001
10.0	**QUALITY**
10.1	Knowledge of Requirements
10.2	Material/Equipment/Works Quality
10.3	Adherence to Rules & Regulations
10.4	Specifications and Standards
11.0	**INSPECTION/PARTICIPATION**
11.1	Right to Carry Out Inspection

GENERAL CONDITIONS OF CONTRACT

CONTENTS	
CLAUSE NO.	**DESCRIPTION**
11.2	Facilitating Inspection
11.3	Third Party Nomination
11.4	Waiver of Inspections
11.5	Incorrect Inspection Call
12.0	**MDCC & DELIVERY OF MATERIALS**
12.1	Material Dispatch Clearance Certificate
12.2	Right to Rejection on Receipt
12.3	Consignee
12.4	Submission of Mandatory Documents on Delivery
12.5	Dispatch and Delivery Instructions
13.0	**GUARANTEE**
13.1	Guarantee of Performance
13.2	Guarantee period
13.3	Failure in Guarantee period (GP)
13.4	Cost of repairs on failure in GP
13.5	Guarantee Period for Goods Outsourced
13.6	Latent Defect
13.7	Support beyond the Guarantee Period
14.0	**LIQUIDATED DAMAGES**
14.1	LD Waiver Request
15.0	**UNLAWFUL ACTIVITIES**
16.0	**CONFIDENTIALITY**
16.1	Documents
16.2	Geographical Data
16.3	Associate’s Processes
16.4	Exclusions
16.5	Violation
17.0	**INTELLECTUAL PROPERTY RIGHTS**
18.0	**INDEMNITY**
19.0	**LIABILITY & LIMITATIONS**
19.1	Liability
19.2	Limitation of Liability
20.0	**FORCE MAJEURE**
21.0	**SUSPENSION OF CONTRACT**
21.1	Suspension for Convenience
21.2	Suspension for Breach of Contract Conditions
21.3	Compensation in lieu of Suspension

GENERAL CONDITIONS OF CONTRACT

CONTENTS	
CLAUSE NO.	**DESCRIPTION**

22.0	**TERMINATION OF CONTRACT**
22.1	Termination for Default/Breach of Contract
22.2	Termination for Convenience of Associate
22.3	Termination for Convenience of TPC
23.0	**DISPUTE RESOLUTION AND ARBITRATION**
23.1	Governing Laws and jurisdiction
24.0	**ATTRIBUTES OF GCC**
24.1	Cancellation
24.2	Severability
24.3	Order of Priority
25.0	**ERRORS AND OMISSIONS**
26.0	**TRANSFER OF TITLES**
27.0	**INSURANCE**
28.0	**SUGGESTIONS & FEEDBACK**
29.0	**CONTACT POINTS**
30.0	**LIST OF ANNEXURES**

GENERAL CONDITIONS OF CONTRACT

1.0 ORGANIZATIONAL VALUES

The Tata Group has always been a value driven organization. These values continue to direct the Group's growth and businesses. The six core Tata Values underpinning the way we do business are:

Integrity - We must conduct our business fairly, with honesty and transparency. Everything we do must stand the test of public scrutiny.

Understanding - We must be caring, respectful, compassionate and humanitarian towards our colleagues and customers around the world and always work for the benefit of India.

Excellence - We must constantly strive to achieve the highest possible standards in our day to day work and in the quality of goods and services we provide.

Unity - We must work cohesively with our colleagues across the group and with our customers and partners around the world to build strong relationships based on tolerance, understanding and mutual co-operation.

Responsibility - We must continue to be responsible and sensitive to the countries, communities and environments in which we work, always ensuring that what comes from the people goes back to the people many times over.

Agility - We must work in a speedy and responsive manner and be proactive and innovative in our approach.

2.0 ETHICS

In our effort towards Excellence and in Management of Business Ethics at TPC, an Ethics Management Team is constituted.

The main objective of the Ethics Management Team is to:

1. Record, address and allay the issues and concerns on ethics raised by different stakeholders like employees, consumers, vendors, Associates etc. by initiating immediate corrective actions.
2. Ensure proper communication of the ethics policies and guidelines through prominent displays at all offices of TPC and through printed declarations in all concerned documents where external stakeholders are involved.
3. Ensure proper framework of policies as preventive measures against any ethics violation recorded by them.
4. Prepare and submit MIS of all issues and concerns, corrective and preventive actions on monthly basis to the top management for their information.

All Associates and Stakeholders are requested to register any grievance on ethics violation on our website www.tatapower.com

2.1 Tata Code of Conduct

The Business Associate and TPC shall be bound by the provisions/ clauses mentioned in Tata Code of Conduct (TCoC) in all their dealings with stakeholders. The Associate is advised to go through the TCoC document available as Annexure-J.

GENERAL CONDITIONS OF CONTRACT

3.0 CONTRACT PARAMETERS

3.1 Issue/Award of Contract

TPC awards the contract to the Associate in writing in the form of Purchase Order (PO) or Rate Contract (RC), hereafter referred as Contract, through in any or all of following modes physical handover / post / e-mail / web document / fax with all the attachments/enclosures which shall be part of the contract document.

On receipt of the contract, the associate shall return to TPC copy of the contract document duly signed by legally authorized representative of associate, within two days of Effective Date of Contract for contracts having contract execution time less than 30 days and within five days for all other contracts.

Note- In case of RC though, further Release Orders (RO) shall be issued by TPC on RC rates and terms & Conditions as per the requirement of TPC.

3.2 Contract Commencement Date

The date of issue/award of contract shall be the Effective Date of Contract or Contract Commencement date.

3.3 Contract Completion Date

The date of expiry of Guarantee Period shall be deemed as the Contract Completion Date.

3.4 Contract Period/Time

The period from Contract Commencement Date to Contract Completion Date shall be deemed as the Contract Period/Time.

3.5 Contract Execution Completion Date

The stipulated date for completing the supply as per schedule of quantities shall be deemed as the Contract Execution Completion Date.

3.6 Contract Price /Value

The total all inclusive price/value mentioned in the PO/RC is the Contract Price/Value and is based on the quantity, unit rates and prices quoted and awarded and shall be subject to adjustment based on actual quantities supplied and accepted and certified by the authorized representative of the company unless otherwise specified in schedule of quantities or in contract documents.

3.7 Contract Document

The Contract Document shall mean and include but not limited to the following:

- NIT/Tender Enquiry, QR, Instruction to Bidders, Special Condition of Contract (SCC) of tender, GCC, Technical & Commercial Specifications including relevant annexure and attachments).
- Bids & Proposals Received from Associate including relevant annexure/attachments.
- RC/PO with agreed deviations from the tender/bid documents.
- All the Inspection and Test reports, Detailed Engineering Drawings.
- Material Dispatch Clearance Certificate (MDCC).
- Minutes of Meeting (MoM)

GENERAL CONDITIONS OF CONTRACT

3.8 Contract Language

All documents, instructions, catalogues, brochures, pamphlets, design data, norms and calculations, drawings, operation, maintenance and safety manuals, reports, labels, on deliveries and any other data shall be in English Language.

The Contract documents and all correspondence between the TPC, Third Parties associated with the contract, and the Associate shall be in English language.
However, all signboards required indicating "Danger" and/or security at site and otherwise statutory required shall be in English, Hindi, and local languages.

3.9 Reverse Auction

TPC reserves the right to conduct the reverse auction (instead of public opening of price bids) for the products / services being asked for in the tender. The terms and conditions for such reverse auction events shall be as per the Acceptance Form attached in Annexure F. The bidders along with the tender document shall mandatorily submit a duly signed copy of the Acceptance Form as mentioned in the Annexure J as a token of acceptance for the same.

4.0 SCOPE OF WORK

All the activities that are to be undertaken by the Associate to realize the contractual deliverables in completeness form Scope of Work. Following clauses list, but not limited to, major requirements of the scope of work.

The associate shall satisfy himself and undertake fully the technical/commercial requirements of items to be supplied as listed in the Schedule of Quantities together with the tests to be performed /test reports to be furnished before dispatch, arrangement of stage and final inspections during manufacturing as per terms and conditions of contract, technical parameters & delivery terms and conditions including transit insurance to be met in order to fully meet TPC’s requirements.

Completeness: Any supplies and services which might have not been specifically mentioned in the Contract but are necessary for the scope mentioned in Special Terms & Conditions and/or completeness of the works at the highest possible level, including any royalties, license fees & compensation to be paid, whether incurred by the associates or by a third party for the work covered in the scope, regardless of when incurred, shall be supplied/provided by the associate without any extra cost and within the time schedule for efficient , smooth and satisfactory operation and maintenance of the works at the highest possible level under Indian conditions (but according to international standards for facility of this type), unless expressly excluded from the scope of supplies and services in this Contract.

TPC have the right, during the performance of the Contract, to change the scope and/or technical character of the Project and/or of the supplies and services stipulated in the Contract by submitting a request in writing to the Associate. The Associate shall, within fifteen days of receipt of such request from the TPC, provide Purchaser with a reasonably detailed estimate of the cost of the change outlined in the request.

In the event, TPC requests a change, the Contract price and time shall be adjusted upwards or downwards, as the case may be and shall be mutually agreed to. The associate shall not be entitled to any extension of time unless such changes adversely affect the time schedule.

The Associate shall not proceed with the changes as requested till adjustment of contract price and time schedule where so applicable in terms of or otherwise directed by the TPC.

GENERAL CONDITIONS OF CONTRACT

4.1 Bid Evaluation- Commercial & Technical

TPC reserves the right to evaluate the bid on below parameters as per the requirement:

Commercial Evaluation: The bid shall be evaluated on the basis of Qualifying Requirement parameters and other commercial parameters as mentioned in tender.

Technical Evaluation: The bid shall be evaluated on the parameters and not limited to Bidder Experience, Bidder Performance with other utility/company, internal performance feedback, Technical Specification, General Technical Parameters (GTP), Layout, Drawings etc.

TPC reserves the right to carry out Factory Evaluation of Manufacturer along with the Visit to executed Sites for further evaluation to ascertain bidder's manufacturing capability, quality procedures & Performance of executed works.

5.0 PRICES/RATES/TAXES

Unless specified elsewhere in the contract document, the prices/rates are inclusive of cost of finished product for which MDCC will be issued by TPC, packaging and forwarding charges, freight and transit insurance charges covering loading at Associate's works, transportation to TPC store/site & unloading & delivery at TPC stores/TPC site, cost of documentation including all the relevant test certificates and other supportive documents to be furnished.

The Prices/Rates are inclusive of all taxes, levies, cess and duties, particularly Goods and Services Tax as applicable. All government levy / taxes shall be paid only when the invoice is submitted according to the relevant act.

The prices/rates shall remain firm till actual completion of entire supply of goods/material/equipment as per contract is achieved and shall remain valid till the completion of the contract.

The prices shall remain unchanged irrespective of TPC making changes in quantum in all or any of the schedules of items of contract.

5.1 Changes in Statutory Tax Structure

If rate of any or all of the statutory taxes and duties applicable to the contract changes, such changes shall be incorporated by default if the changes occur within the contract execution time and shall be applicable if the contract is executed by the Associate within the Contract Execution Time.

For execution of contracts beyond contract execution time, where the delay is not attributable to TPC no upward revision in tax /duties shall be considered irrespective of changes in the statutory tax structure either within the contract execution time or beyond. However, in such cases, benefits due to any downward revisions in statutory tax rates shall be passed on to TPC.

6.0 TERMS OF PAYMENT

On delivery of the materials in good condition and certification of acceptance by TPC official, Associate shall submit the Bills/Invoices in original in the name of "The Tata Power Company Limited" to invoice desk, complete with all required documents as under:

- Test Reports (4 sets).
- MDCC issued by TPC.
- Packing List.

GENERAL CONDITIONS OF CONTRACT

- Drawing and Catalogue.
- Guarantee/Warrantee Card.
- Delivery Challan.
- O&M Manual.
- Copy of Order.
- Minutes of Meeting.
- E-Way challan (if applicable)

Bills/ invoices shall mention Supplier's GST Number. TPC will make 100% payment within 30 days of submission of the Bill/Invoice complete in all respects and along with all the requisite documents mentioned above, subject to condition that Associate has furnished the requisite Security-cum-Performance Guarantee as stipulated in the contract.

6.1 Quantity Variation

Payment will be made on the basis of actual quantity of supplies/actual measurement of works accepted by TPC and not on the basis of contract quantity.

6.2 Full and Final Payment

Full & Final Payment in all contracts shall be made subject to the associate submitting "No Demand Certificate" in the format as per Annexure-C.

7.0 MODE OF PAYMENT

Payment shall be made through crossed Cheque or RTGS whichever of the two modes chosen by the Associate, in favour of Associate's Bank Account on TPC records, on whose name Contract has been issued. Those Associates opting for the RTGS mode shall submit the details of Bank Account and other details as per annexure G. Further, for any payments made, TPC is not responsible for any consequences/disputes Associate have among the owners channel partners, sub-Associates and all such dispute/concerns shall be settled solely by the Associate.

8.0 SECURITY CUM PERFORMANCE DEPOSIT

Associates shall submit within 21 days from the effective date of issue of PO/RC, Security Performance Bank Guarantee (SPBG) in the format as per Annexure B of this document from banks acceptable to TPC for:

(a) 5% of the PO value if purchase order value is more than Rs 5 Crores.
(b) 10% of the PO value if purchase order value is less than Rs 5 Crores.
This shall remain valid till the end of the Guarantee Period of contract, plus one month.

(c) 5% of the RC value in case of Rate Contract. This shall remain valid till the Guarantee period plus one month.

- For PO/RC values less than Rs. 5 lacs, Associate may request for deduction of amount equivalent to SPBG value from their first invoice. Such amount shall be withheld by TPC while processing the invoice and shall be released after completion of Guarantee Period plus one month.
- For PO/RC values less than Rs. 3 lacs, the clause (8.0) for Security cum Performance Bank Guarantee (SPBG) shall not be applicable.

GENERAL CONDITIONS OF CONTRACT

- In case of RC (Rate Contract) after the expiry of RC validity, Associate shall have to submit SPBG. However, the Associate has the option to re-submit the SPBG as per actual RO

  (Release Order) value issued against the RC, valid for Guarantee Period plus one month. The Guarantee Period shall be considered as per the last RO issued against the said RC. The original SPBG as submitted against the RC shall be released on submission of the new SPBG to TPC. Alternatively, Associate may extend the validity of original SPBG only till the requisite period, i.e. Guarantee Period plus one month.

9.0 STATUTORY COMPLIANCE

9.1 Compliance to Various Acts

Associate should ensure adherence to all applicable laws, rules and regulation applicable under this contract from time to time. In case of violation any risk, costs etc shall be in associates account and keep TDPPL indemnified always till completion of contracts.

9.2 SA 8000

As TPC is SA 8000 compliant, it expects its Associates to follow guidelines of SA 8000:2014 on the following aspects

1. Child Labour
2. Forced or Compulsory Labour
3. Health & Safety
4. Freedom of Association & Right to Collective Bargaining
5. Discrimination
6. Disciplinary Practices
7. Working Hours
8. Remuneration
9. Management System

9.3 Affirmative Action

TPC appreciate and welcome the engagement/employment of persons from SC/ST community or any other deprived section of society by their business associates.

Relaxation in Contract Clauses under Affirmative Action for SC/ ST Business Associates**

TPC believes that inclusive growth is the key to sustainable development, and to promote the same Policy on Affirmative Action for Scheduled Caste & Scheduled Tribe Communities has been adopted across the company.

Under the same pre-text, and to promote entrepreneurship among SC/ST community TPC has taken initiative by proposing relaxations in contract clauses as per below:

S. No	Initiative	for SC/ ST BA's	Guideline Document
1	Tender Fees	100% waiver for SC/ST community	All Open Tenders
2	Earnest Money Deposit	50 % relaxation of estimated EMD value	All limited and Open Tenders

GENERAL CONDITIONS OF CONTRACT

3	Performance Bank Guarantee	50% relaxation in PBG for order value above 50 lacs else 25% relaxation	All limited and Open tenders
4	Turnover	25% relaxation in company turnover under qualifying requirement criteria	All Open Tenders

****Classification of BAs under SC/ST shall be governed under following guidelines:**

- Proprietorship/ Single Ownership Firm: Proprietor of the firm should be from SC/ST community. Governing document shall be duly audited balance Sheet for the last FY bearing the name of proprietor.
- Partnership Firm: Only such firms shall qualify which have SC/ST partners holding equal to or more than 50% of the total ownership pattern of the firm. Governing document shall be Partnership Deed and audited balance sheet/ ITR for last FY.
- Private limited company: Only such firms shall qualify which have SC/ST directors holding equal to or more than 50% of the total ownership pattern of the firm. Governing document shall be Memorandum of Understanding (MoU) and/or Article of Association (AoA).

Governing document shall be Memorandum of Understanding (MoU) and/or Article of Association (AoA).

Note: Certification from SC/ST commission shall be required for deciding upon SC/ST status of a person.

9.4 MSME Development ACT 2006

Provisions for Firms falling in The Micro, Small and Medium Enterprise Development Act 2006:-

- Business Associate is requested to inform the TPC if they fall under provisions of The Micro, Small and Medium Enterprises Development Act, 2006 legislation, and provide necessary documents to TPC. The Associate also needs to mention the relevant details on their invoice/ bill.
- Business Associate shall submit the self-undertaking of registration in MSME category at the time of bidding as well as on an annual basis to TPC, enabling them to avail the consequent benefits, failing which TPC may take appropriate action against such defaults.
- Business Associates falling in MSME category are exempted from submitting the Tender Fee when participating in TPC tenders. Also they are eligible to submit concessional EMD at 50% of the EMD otherwise applicable.

9.5 ISO 14001

The vendor to confirm whether their organization is ISO 14001 certified. If not, the Vendor must certify that the handling, use and disposal of their product/ by-products conform to practices consistent with sound environment management and local statues. The Vendor shall ensure that all the wastes are disposal in environmental friendly way with strict compliance to applicable laws including adherence to MoEF guidelines with respect to the disposal of batteries, lead waste, copper cables, ash, waste oil, e-waste etc. which shall be disposed through MoEF approved parties only. The vendor shall also dispose off the e-waste generated at the end of the product life cycle at its own costs and risk as per the MoEF guidelines/ Orders

GENERAL CONDITIONS OF CONTRACT

10.0 QUALITY

10.1 Knowledge of Requirements

The Associate shall be deemed to have carefully examined and to have knowledge of the equipment, the general and other conditions, specifications, schedules, drawings, etc. forming part of the Contract and also to have satisfied himself as to the nature and character of the work to be executed and the type of the equipment and duties required including wherever necessary of the site conditions and relevant matters and details. Any information thus procured or otherwise obtained from TPC/Consultants shall not in any way relieve the Associate from his responsibility and executing the works in accordance with the terms of contract.

10.2 Material/Equipment/Works Quality

The items / works under the scope of the Associate shall be of the best quality and workmanship according to the latest engineering practice and shall be manufactured from materials of best quality considering strength and durability for their best performance and, in any case, in accordance with the specifications set forth in this Contract. All material shall be new. Substitution of specified material or variation from the process of fabrication/ construction/ manufacture may be permitted but only with the prior written approval of the TPC.

10.3 Adherence to Rules & Regulations

The Associate shall procure and/or fabricate/erect all materials and equipment in accordance with all requirements of Central and State enactment, rules and regulations governing such work in India and at site. This shall not be construed as relieving the Associate from complying with any requirement of TPC as enumerated in the Contract which may be more rigid than and not contrary to the above mentioned rules, nor providing such construction as may be required by the above mentioned rules and regulations. In case of variance of the Technical Specification from the laws, ordinance, rules and regulations governing the work, the Associate shall immediately notify the same to the TPC. It is the sole responsibility of the Associate, however, to determine that such variance exists. Wherever required by rules and regulations, the Associate shall also obtain the statutory authorities' approval for the plant, machinery and equipment to be supplied by the Associate.

10.4 Specifications and Standards

The Associate shall follow all codes and standards referred in the Contract Document. Codes and standards of other may be followed by the Associate with the prior written approval of TPC, provided materials, supplies and equipment according to the standard are equal to or better than the corresponding standards specified in the Contract.

Brand names mentioned in the Contract documents are for the purpose of establishing the type and quality of products to be used. The Associate shall not change the brand name and qualities of the bought out items without the prior written approval of the TPC. All such products and equipment shall be used or installed in strict accordance with original manufacturer's recommendations, unless otherwise directed by the TPC. In any circumstances the codes, specimen and standards prescribed by any government agency should not be violated.

GENERAL CONDITIONS OF CONTRACT

11.0 INSPECTION/PARTICIPATION

11.1 Right to Carry Out Inspection

TPC reserves the right to send its representatives for inspection or participation at various stages of contract execution listed below, applicable as per contract construction.

- During basic design and detail engineering of material/ Equipment carried out by Associate /Outsourced Agencies.
- During manufacturing stages of the product at Associate's/Associate's Outsourced Agency's Plant/Facility.
- During Pre-dispatch Inspection and Testing of finished/manufactured product at Associate's/Associate's outsourced Agency's Plant/Facility.
- During Installation & Commissioning Activities/Stages.
- Prior to Clearing of the completed installation for commissioning.
- Any other stage as find appropriate by TPC during contract execution time.

All inspections and participations shall be carried out by TPC giving written intimation to the Associate or receiving appropriate advance written inspection call from the Associate, unless otherwise specified elsewhere in the contract document.

MDCC request shall be submitted by BA to TPC at least 7 days before inspection date.

11.2 Facilitating Inspection

The Associate shall provide all opportunities and information to TPC's engineers to get acquainted with the technical know-how and the methods and practices adopted by the Associate in basic and detail engineering. The Associate shall provide documents, drawings, calculations etc. as may be required by TPC's Engineers.

The Associate shall provide free of charge office accommodation, office facilities, secretarial services, communication facilities, general and drawing office stationary, etc. as may be reasonably required by the TPC's engineers. Similarly, facilities shall also be provided by Associate's outsource agencies/partners/authorized dealers (collectively termed as sub associates) if such basic and detail engineering activities are carried out in the design offices of sub-Associates.

The Associate shall be responsible for the safety of employees of TPC/Third Party Agency when they are at the Associate's /Associate's outsource agency's plant or facility for carrying out/witnessing inspection/testing. All statutory safety precautions as applicable shall be followed by the Associate during Inspection Testing. If TPC inspectors are not satisfied with the safety arrangements at the plant, TPC have the right to call off inspection till such time corrective action is taken by the Associate.
Before raising the call for pre-dispatch final inspection and testing, the Associate shall conduct all the tests—type tests, routine tests etc-as specified in the contract document and submit copies of the test certificates to TPC along with the inspection call, for scrutiny of TPC.

The Associate and TPC shall jointly document all the observations, comments and action points after completion of inspection and it shall be binding on the Associate to provide compliance on all the points requiring compliance and furnish the compliance report to the designated authority of TPC for receiving clearance for dispatch of materials

GENERAL CONDITIONS OF CONTRACT

11.3 Third Party Nomination

TPC also may nominate a third party for the purpose of carrying out the inspection and such an agency shall be entitled to all the rights and privileges of TPC as far as conducting the inspection.

11.4 Waiver of Inspections

TPC on its own discretion shall chose to waive off any inspection and ask the Associate to submit all the test reports as applicable as per contract specifications, related to inspection and testing of the goods ordered for scrutiny and clearance for dispatch.

11.5 Incorrect Inspection Call

In case it is observed that the material offered for inspection is not ready at the time of TPC inspection visit rendering it as futile, all costs towards such inspection shall be recovered from the BA. Taxes as applicable on such recoveries shall be borne by the BA.

12.0 MDCC & DELIVERY OF MATERIALS

12.1 Material Dispatch Clearance Certificate

Associate shall deliver material/goods/equipment against Supply Contracts or Supply Part of Composite/Service Contracts only after receiving Material Dispatch Clearance Certificate (hereafter termed as MDCC) issued by designated authority of TPC. Material delivered at TPC stores or at project site without a valid MDCC issued by the designated official of TPC shall be rejected. MDCC shall be issued to associate furnishing compliance report on the action points documented during pre-dispatch inspection and testing at Associate's/ Sub Associate's plant/ facility. In case Pre-dispatch inspection is waived at the discretion of TPC, then, MDCC shall be issued on receiving all the test reports-routine& type-from the Associate and finding them in order.

The associate shall include and provide for securely protecting and packing the materials so as to avoid loss or damage during handling and transport by air, sea, rail and road or any other means.

All such packing shall allow to the extent possible for easy removal and checking at Site. The associate shall take special precautions to prevent rusting of steel and iron parts during transit by sea. Gas seals or other materials shall be utilized by the associate for protection against moisture during transit of all Plant and Equipment.

Each Equipment or parts of Equipment shall be tagged with reference to the assembly drawings and corresponding part numbers. Each bale or package shall contain a packing note quoting specifically the name of the associate, item description, quantity, item / package identification.

All packing cases, containers, packing and other similar materials shall be new and supplied free by the associate and it shall not be required to be returned to the associate.
Notwithstanding anything stated in this clause, the associate shall be entirely responsible for loss, damage or depreciation or deterioration to the materials and supplies due to faulty and/or insecure packing or otherwise during transportation to the Site until otherwise provided herein.

In case of the consignments dispatched by road, the associate shall ensure that it or its subcontractors:

GENERAL CONDITIONS OF CONTRACT

i) Identify and obtain the correct type of trucks/trailers, keeping in view the nature of consignments to be dispatched.

ii) Take such actions as may be necessary to avoid all possible chances of damages during transit and to ensure that all packages are firmly secured.

Timelines for inspection and MDCC is as below:

S. No.	Inspection	MDCC issuance time including Inspection time (max.)
1	Outside Odisha	12 days
2	Within Odisha	5 days
3	Waiver*	3 working days

* Associate is expected to raise the inspection call assuming that Inspection shall be carried out by TPC. The decision for waiver of inspection shall be on sole discretion of TPC.

12.2 Right to Rejection on Receipt

Goods/Material/Equipment delivered in condition physically damaged & incomplete as a product ordered, or not packed and transported as per the terms and conditions of the contract is liable to be rejected. Such item shall be lifted back by Associates within 15 days from receipt of rejection note from TPC and have to supply back the material within next 30 days or within the timeframe mutually decided by Associate and TPC.

If delivery of the material is beyond the agreed time, Liquidated damage clause, mentioned in this GCC separately shall be applicable; but the period for levy of LD shall be considered as per the original delivery schedule and not from the agreed timelines for material rectification.

12.3 Consignee

Unless otherwise specified in the Contract Document, Materials/Goods/Equipment shall be consigned to “Stores-In-Charge”, TPC, Bhubaneswar.

12.4 Submission of mandatory documents on Delivery

Following documents shall be mandatorily submitted by BA along with supply of material to TPC stores/site:

S. No.	Documents	Requisite
1	Invoice copy in original	With all consignments
2	LR copy	Wherever required
3	Packing list	With all consignments
4	MDCC	With all consignments
5	Purchase order / Release order	Signed copy
6	Test certificates	With all consignments
7	Inspection/JVR report	In case pre-dispatch inspection is conducted
8	Device data in CD as per template for metering items	Wherever applicable

12.5 Dispatch and Delivery Instructions

S. No.	Instructions

GENERAL CONDITIONS OF CONTRACT

1	Purchase order/ Release order no. shall be mentioned on invoice and on material
2	TPC material code and material description shall be mentioned in invoice and on material.
3	“Property of TPC” shall be embossed on material.
4	The material shall be properly sealed and packed in standard packing as per purchase order terms & conditions.
5	The weight and quantity of material shall be mentioned wherever applicable
6	The material supplied shall be co-related with the packing list.
7	The name plate detail on equipment shall include Material code, Material description, specification detail of material [as applicable], Serial No. Year of manufacturing, PO/RO no. and date, “PROPERTY OF TPC, Bhubaneswar”, Guarantee period and Associate’s name.
8	In case of manual unloading, supplier / transporter shall deploy sufficient Labour for unloading the material at TPC central store. For heavy item(s), crane will be provided by TPC [unloading cost will be recovered from the associate].
9	The driver should have valid License and one helper in truck. All the documents of truck like registration papers, PUC etc. should be available in Truck.
10	BA representative should accompany the material and get it unloaded / stacked in his presence wherever possible.

13.0 GUARANTEE

13.1 Guarantee of Performance

Associates shall stand guarantee that the equipment and material supplied under the contract is free from design, manufacturing, material, construction, erection & installation and workmanship & quality defects and is capable of its due, rated and intended quality performance, as an integrated product delivered under the contract, for a specific period termed as Guarantee Period(as elaborated elsewhere in this clause). The Associate should also guarantee that the equipment/material is new and unused except for the usage required for the tests and checks required as part of quality assurance.

13.2 Guarantee Period

The Guarantee Period will be equipment/service/work specific and shall be as specified in the Standard Specifications of TPC for the equipment/material/service/work and where standard specifications are not part of contract documents or guarantee period is not specified in the standard specifications,, the guarantee period shall be as per the Special Terms and Conditions of the Contract. In case of no mention of the guarantee period in standard specifications or SCC Guarantee Period will be 12 Months from the Date of Commissioning or 24 months from the date of delivery of final lot of supplies made, whichever is earlier.

13.3 Failure in Guarantee Period (GP)

If the equipment and material supplied under the contract fails to perform its due, rated & intended quality performance, during the Guarantee period, the associate is liable to undertake repair/rectify/replace the equipment and material supplied within time frame specified in the SCC or elsewhere in the contract documents at associate’s cost to make the equipment and material supplied/service or work rendered under the contract of performing its due, rated and intended quality performance. If Associate fails to repair/rectify/replace the equipment or material supplied rendered under the contract, failed in Guarantee Period, TPC will be at liberty

GENERAL CONDITIONS OF CONTRACT

to get the same done at Associate's risks and costs and recover all such expenses plus the TPC's own charges (@ 20% of expenses incurred), from the Associate or from the "Security cum Performance Deposit" as the case may be.

If during the Warranty/ Guarantee period some parts of the supplies are replaced owing to the defects/ damages under the Warranty, the Warranty period for such replaced parts shall be until the expiry of twelve months from the date of such replacement or renewal or until the end of original Guarantee period, whichever is later.

Any repairs during the Guarantee Period shall be carried out by the Associate within 30 days of reporting the issue to Associate by TPC. However, if replacement of the Equipment is required, Associate shall notify the same to TPC within 7 days of reporting the issue by TPC. Thereafter, the total time for supply of new equipment/ material shall be equal to the original delivery period of that equipment/ material as specified in the Contract. In case the Associate is not able to rectify/ replace the faulty equipment/ material within the stipulated timelines as mentioned above, penalty shall be levied as per the Liquidated Damages clause mentioned in this document. The penalty amount shall be recovered from the payment due to the vendor or by encashment of the SPBG as the case may be.

13.4 Cost of repairs on failure in GP

The cost of repairs/rectification/replacement, required transportation, site inspection /mobilization/dismantling and re-installation costs as applicable, to be borne by Associate. The Associate has to ensure that the interruption in the usage of intended purpose of the equipment is minimized to the maximum extent In lieu of the time taken for repairs/rectification/replacement.

13.5 Guarantee period for Goods Outsourced

If the Associate outsources partly equipment/materials/services from third party as mutually agreed upon at the pre award stage of contract, TPC shall have the benefit of any additional guarantee period if provided by the third party for the part supplied/executed by them.

13.6 Latent Defect

Hidden defects in manufacturing or design of the product supplied and which could not be identified by the tests conducted but later manifested during operation of the equipment are termed as latent defects. Associates shall further be responsible for 'free replacement' for another period of THREE years from the end of the guarantee period for any 'Latent Defects' if noticed and reported by the Company.

13.7 Support beyond the Guarantee Period

The Associate shall ensure availability of spares and necessary support for a period of atleast 10 years post completion of guarantee period of equipment supplied against the contract.

14.0 LIQUIDATED DAMAGES

a) For supplies which are of standalone use, multiple in quantities and having a single final delivery schedule, Liquidated damages shall be levied without prejudice to any of the other contractual rights of TPC, as described below:

   For delay of each week and part thereof from the delivery schedule specified in the contract, 1% of contract value corresponding to undelivered quantity, provided full quantity is supplied within 130% of the original contract time. If full contractual quantity is

GENERAL CONDITIONS OF CONTRACT

not delivered within 130% of contract time for delivery, TPC has the right to levy LD on the entire contract value, subject to a maximum of 10% of the total contract value.

b) For Supplies having phased delivery schedule as per contract terms, standalone use and multiple in quantities, Liquidated damages shall be levied without prejudice to any of the other contractual rights of TPC, as described below:

For the purpose of calculating and applying LD, each delivery lot shall be considered separately. For delay of each week and part thereof, from the delivery schedule specified for the lot, 1% of the contract value corresponding to the undelivered quantity of the lot subject to a maximum of 10% of the total contract value of the subject lot. However, if full contractual quantity is not delivered within 130% of contract time for delivery, TPC has the right to levy LD on the entire contract value, subject to a maximum of 10% of the total contract value. Deduction of LD shall be on landed cost i.e contract value inclusive of taxes and in pursuant statutory compliance GST would be applicable at the stipulated rate and the same shall be borne by Business Associate. In case of LD deduction, a GST invoice shall be issued by TPC as a proof of deduction/ recovery.

14.1 LD Waiver Request

Any request of LD waiver shall be submitted within thirty (30) days of deducting LD. Request submitted beyond the timeline shall not be entertained.

15.0 UNLAWFUL ACTIVITIES

The Associate shall have to ensure that none of its employees are engaged in any unlawful activities (whether covered under the scope of the present GCC or not) subversive of the TPC's interest failing which appropriate action (legal or otherwise) may be taken against the Associate by the TPC, in accordance with the terms of the present GCC.

16.0 CONFIDENTIALITY

Associate and its employees or representatives thereof shall strictly maintain the confidentiality of various information they come across while executing the contract as detailed below.

16.1 Documents

All maps, plans, drawings, specifications, schemes and other documents or information related to the Contract/Project and the subject matter contained therein and all other information given to the Associate by the TPC in connection with the performance of the contract shall be held confidential by the Associate and shall remain the property of the TPC and shall not be used or disclosed to third parties by the Associate for any purpose other than for which they have been supplied or prepared. The Associate may disclose to third parties, upon execution of confidentiality agreements, such part of the drawings, specifications or information if such disclosure is necessary for the performance of the Work provided such third parties agree in writing to keep such information confidential to the same extent and degree as provided herein, for the benefit of the TPC.

16.2 Geographical Data

Maps, layouts and photographs of the unit/plant including its surrounding regions showing vital installation for national security of country or those of TPC shall not be published or disclosed to the third parties or taken out of the country without prior written approval of the TPC and upon execution of confidentiality agreements satisfactory to the TPC with such third parties prior to disclosure.

GENERAL CONDITIONS OF CONTRACT

16.3 Associate's Processes

Title to secret processes if any developed by the Associate on an exclusive basis and employed in the design of the equipment shall remain with the Associate. TPC shall hold in confidence such processes and shall not disclose such processes to the third parties without prior approval of the Associate and execution by such third parties of secrecy agreements satisfactory to the Associate prior to disclosure. Upon completion of contract, such processes shall become the property of the TPC. Title to technical specifications, drawings, flow sheets, norms, calculations, diagrams, interpretations of test results, schematics, layouts and such other information, which the Associate has supplied to the TPC under the Contract shall be passed on to the TPC. The TPC shall have the right to use these for construction, erection, start-up, Trial Run, operation, maintenance, modifications and/or expansion of the works including for the manufacture of spare parts.

16.4 Exclusions

The provision of Clauses 16.1 to 16.3 shall not apply to information:

- Which at the time of disclosure are in the public domain which later on become part of public domain through no fault of the party concerned, or
- Which were in the possession of the party concerned prior to disclosure to him by the other party, or
- Which were received by the party concerned after the time of disclosure without restriction on disclosure or use, from a third party who did not acquire such information directly or indirectly from the other party or has no obligation of confidentiality for such information.

16.5 Violation

In case of violation of this clause, the Associate is liable to pay compensation and damages as may be determined by the competent authority of TPC.

17.0 INTELLECTUAL PROPERTY RIGHTS

If, in the course of performance of its functions and duties as envisaged by the scope of the present GCC, the Associate acquires or develops, any unique knowledge or information which would be covered, or, is likely to be covered within the definition of a trademark, copyright, patent, business secret, geographical indication or any other form of intellectual property right, it shall be obliged, under the terms of this present GCC, to share such knowledge or information with the TPC. All rights, with respect to, or arising from such intellectual property, as afore mentioned, shall solely vest in TPC.

Moreover, the Associate undertakes not to breach any intellectual property right vesting in a third party/parties, whether by breach of statutory provision, passing off, or otherwise. In the event of any such breach, the Associate shall be wholly liable to compensate, indemnify or make good any loss suffered by such third party/parties, or any compensation/damages arising from any legal proceeding/s, or otherwise. No liability of TPC shall arise in this respect, and any costs, damages, expenses, compensation payable by TPC in this regard to a third party/parties, arising from a legal proceeding/s or otherwise, shall be recoverable from the Associate.

GENERAL CONDITIONS OF CONTRACT

18.0 INDEMNITY

The Associate shall at all times indemnify, keep indemnified and hold harmless the TPC and its officers, directors, employees, affiliates, agents, successors and assigns against all actions, claims, demands, costs, charges and expenses arising from or incurred by reason of any infringement of patent, trade mark, registered design, copy rights and/or industrial property rights by manufacture, sale or use of the equipment supplied by the Associate whether or not the TPC is held liable for by any court judgement. In this connection, the TPC shall pass on all claims made against him to the Associate for settlement.

The Associate assumes responsibility for and shall indemnify and save harmless the TPC from all liability, claims, costs, expenses, taxes and assessments including penalties, punitive damages, attorney's fees and court costs which are or may be required to be paid by the TPC and its officers, directors, employees, affiliates, agents, successors and assigns arising from any breach of the Associate's obligations under the Contract or for which the Associate has assumed responsibilities under the Contract including those imposed under any local or national law or laws, or in respect to all salaries, wages or other compensation for all persons employed by the Associate or his Sub-Associates or suppliers in connection with the performance of any work covered by the Contract. The Associate shall execute, deliver and shall cause his Sub-Associate and suppliers to execute and deliver, such other further instruments and to comply with all the requirements of such laws and regulation as may be necessary there under to conform and effectuate the Contract and to protect the TPC.

The TPC shall not be held responsible for any accident or damages incurred or claims arising, due to the Associate's error there from prior to completion of work. The Associate shall be liable for such accidents and after completion of work for such accidents as the case may be due to negligence on his part to carry out Work in accordance with Indian laws and regulations and the specifications set forth herein.

19.0 LIABILITY & LIMITATIONS

19.1 Liability

Except for any specific liability which may be identified in the Contract and which may be payable hereunder, Associate shall not be liable for any special, incidental, indirect, or consequential Damages or any loss of business Contracts, revenues or other financial loss (or equivalents thereof no matter how claimed, computed or characterized) arising out of or in connection with the Performance of the Work or supply of Goods ***unless caused by Associate's negligence, willful misconduct or breach of contract.***

If the Associate is a joint venture or consortium, all concerned parties shall be jointly and severally bound to the TPC for the fulfillment of the provisions of the Contract. The consortium or the joint venture shall designate one party as their leader, who will be the coordinator between the parties and TPC. The constituents & leader of the consortium or joint venture shall not be changed without the prior consent of TPC.

TPC shall have no liability or any special, incidental, indirect or consequential Damages for any loss of Business Contracts, revenues or other financial loss arising out of this Contract.

19.2 Limitation of Liability

The total liability of Associate against any contract shall be limited to the Total All Inclusive Contract Value.

GENERAL CONDITIONS OF CONTRACT

20.0 FORCE MAJEURE

Force Majeure applies if the performance by either Party ("the Affected Party") of its obligations under Contract is materially and adversely affected.

“Force Majeure” shall mean any event or circumstance or combination of events or circumstances referred below and their consequences that wholly or partly prevents or unavoidably delays any Party in the performance of its obligations under this Agreement, but only and to the extent that such events and circumstances are not within the reasonable control, directly or indirectly, of the Affected Party and could not have been avoided even if the Affected Party had taken reasonable care:

- Act of war (whether declared or undeclared), invasion, armed conflict or act of foreign enemy, embargo, blockade, revolution, riot, bombs, religious strife or civil commotion, etc. ▪ Politically motivated sabotage, or terrorism, etc.
- Action or Act of Government or Governmental agency for which remedy is beyond the control of the affected parties. ▪ Any act of God.

Note: Causes like power breakdown/ shortages/fire/strikes, accidents etc do not fall under Force Majeure.

Time being the essence of the Contract, if either party is prevented from the performance of its obligations in whole or in part due to an event of Force Majeure, then provided Notice of happening of any event by the Affected Party is given to the other party within seven (7) days from the date of occurrence of such event, which DIRECTLY has impact on works and submitted details and quantum of resulting effect, but at the same time had made all possible efforts to mitigate and overcome effects thereof, the Affected Party’s performance under this Contract shall be suspended until such event ceases and the Scheduled Completion shall be delayed accordingly.

If Force Majeure event(s) continue for a period of more than three months, the parties shall hold consultation to discuss the further course of action.

Neither party shall be considered to be in default or in breach of its obligation under the Contract to the extent that performance of such obligation by either party is prevented by any circumstances of Force Majeure which arise after effective date of Contract.

Neither party can claim any compensation from the other party on account of Force Majeure.

21.0 SUSPENSION OF CONTRACT

21.1 Suspension for Convenience

TPC may, at any time and at its sole option, suspend execution of all or any portions of the schedule of items of contract to be supplied/work to executed by Associate under the contract by providing to the Associate atleast two business days written notice for contracts having contract completion period less than sixty days and atleast seven business days’ notice for all other contracts.

Upon receipt of any such notice, the Associate shall respond as follows as applicable as per contract construction.

- Immediately discontinue further supply of material/goods specified in the suspension notice for supply contracts

GENERAL CONDITIONS OF CONTRACT

- Immediately discontinue further service/work and supply of materials of those services/materials/work specified in the suspension notice for service /composite contract
- Promptly make every reasonable effort to obtain suspension, upon terms satisfactory to TPC, of all orders, outsourcing arrangements, and rental Contracts to the extent that they relate to performance of the portion of Work suspended by the notice.
- Protect and maintain the portion of the service/Work already completed, including the portion of the Work suspended hereunder, unless otherwise specifically stated in the notice.
- Continue delivering/carrying out the supply/service/work items as per contract conditions, which do not fall under purview of the suspension notice.

On receipt of resumption notice from TPC, the Associate shall resume execution of contract as specified in the resumption notice, within the time frame specified in the resumption notice.

21.2 Suspension for Breach of Contract conditions.

TPC shall suspend execution of whole/or part thereof the contract till such time Associate complies with the conditions stipulated under section clause 22.1 for breach/default of contract conditions.

21.3 Compensation in lieu of Suspension

If the suspension of the contract in whole or in part is for convenience of TPC and not due to any breach of contract conditions by the associate, TPC at its discretion shall consider compensating all reasonable additional costs incurred by Associate in lieu of suspension of whole or part of contract, on representation of the Associate providing justified estimates of such additional costs and such estimates are found acceptable and approved by competent authority of TPC.

If the suspension of contract in whole or part thereof is due to breach of contract conditions (refer clause 22.1) by the Associate, Associate shall not be entitled for any compensation for any cost incurred in lieu of suspension of whole or part of contract and also shall be liable for compensating all the losses arising to TPC in lieu of suspension of contract. Resumption notice shall be subject to the Associate taking corrective action for the breach of contract conditions within the time frame and as per the terms specified in the suspension notice.

22 TERMINATION OF CONTRACT

22.1 Termination for Default/Breach of Contract

The contract / PO /RC shall be subject to termination by TPC in case of breach of the contract by the Associate which shall include but not be limited to the following:

a. Withdrawal or intimation by the Associate of its intent to withdraw or surrender the execution / completion of the contracted work /PO or failure in ensuring adherence to any delivery schedules, in deviation of the contract/PO.

b. Refusal or neglect on the part of the Associate to supply material/equipment of quantity or quality as specified by TPC and within the timeframe as specified in the contract document or refusal or neglect to execute the services/work in terms of the agreed standards of quantity or quality and/or within the timeframe specified in the contract/PO.

c. Failure in any respect to perform any portion of the Work contracted with promptness, diligence, or in accordance with the terms of the contract.

GENERAL CONDITIONS OF CONTRACT

d. Failure to furnish guarantees as specified and /or failure to comply with the terms thereof.

e. Failure to furnish such relevant documents or information within the time specified which may be necessary for due execution / completion of the works and documentation.

f. Liquidation, bankruptcy either voluntary or involuntary OR entering into any composition or compromise with its creditors, or Insolvency.

g. In case any reasonable information has been received by TPC that Associate has adopted/ or attempted to adopt any unethical conduct, action in award of the contract /PO or at any time thereafter.

h. Failure to comply with applicable statutory provisions as contained in the contract or failure to comply with the applicable laws.

i. Failure to comply with safety regulations/clauses stipulated in the contract or as may be generally instructed by TPC.

If the default or breach as specified under clause 22 (except sub clause g thereof) be committed by the associate for the first time, TPC shall issue, along the with notice of default or breach, a warning notice instructing the associate to take remedial/corrective action within the time frame stipulated in the warning notice and not to repeat the same in future. The timeframe for corrective action by the associate shall be specific to the nature of breach of contract and the same shall not be objected to by the Associate. If the Associate fails to comply with the instructions in the warning notice or in taking corrective action to the satisfaction of TPC then TPC may terminate the entire or part of contract at its discretion by issuing termination notice without incurring any liability on this ground.

In case the contract is terminated for any breach of the nature specified in clause 22 g stated above, TPC shall have the right to terminate all the contracts TPC is having with the Associate by issuing termination notice which shall be without prejudice to the other rights of TPC available to it under law.
Without prejudice to its right to terminate for breach of contract, TPC may, without assigning any reason, terminate the Contract in whole or in part at any time at its discretion while the contract is in force by serving a written notice of two weeks to the Associate.

In the event of TPC having proceeded with termination of the contract the associate shall comply and proceed further in the following manner:

a) Associate shall discontinue the supply, on the expiry of the said period of two weeks.

b) Associate shall ensure that no further steps are being taken towards discharge of the obligations, terms and conditions as contained in the contract/PO. This shall include initiation of actions not limited to discontinuation of other allied and associated arrangements which the associate might have entered into with third parties for due discharge of its obligations under the contract with TPC.

c) The Associate shall perform thereafter such tasks as may be necessary to preserve and protect the terminated portion of the material/service/work in progress and the materials and equipment at TPC sites or in transit thereto. However the associate shall continue to fulfill its contractual obligations with regard to the part of contract not terminated.

d) It shall be open for TPC to conduct a joint assessment with the associate of the material, supplies, equipment ,works or in general as to the subject matter of the contract in

GENERAL CONDITIONS OF CONTRACT

regard to which the associate claims having completed its obligations before or during such termination.

e) It shall be open to TPC to seek invocation of the performance bank guarantee or any other guarantee or other security deposit by whatever name called submitted by the associate, which shall not be objected to or protested against by the associate.

In case of termination of the contract the parties agree to be governed inter alia by the following:

a) In case TPC exercises its right of termination as stated above the associate shall not dispute or object to the same.

b) The Associate shall be entitled to receive and claim only such payments OR sums of money from TPC as may be found payable to it in regard to works executed by it under the terms of the contract and no other claim of any nature whatsoever shall be made by the Associate.

c) All such provisions which the parties have agreed to survive and prevail even after termination of the contract shall remain effective despite the termination.

In the event of such termination, TPC may finish the Work by whatever method it may deem expedient, including the hiring of services and /or purchase of material equipment from such third parties as TPC may deem fit or may itself provide any labor or materials and perform any part of the Work. The associate undertakes to bear the incremental costs if any paid by TPC in such a case attributable to failure on the part of the associate. The Associate in such a case shall not be entitled to receive any further payments and any sums found payable to it may be adjusted by TPC against the amount recoverable from him on this ground. The same shall be without prejudice to other rights available to TPC under law against the associate.
Upon the termination of any of the contract due to occurrence of any circumstances provided in clauses stated above and constituting repeated breach or misconduct , TPC shall be entitled to bar the associates its agents , affiliates from undertaking any negotiation / tendering, bidding , participation activities concerning TPC for a period of two years from date of such termination. The same shall be without prejudice to other rights available to TPC.

22.2 Termination for Convenience of Associate

Associate at its convenience may request for termination of contract, clearly assigning the reason for such request. TPC has full right to accept, reject or partially accept such request. However, associate shall continue its supply as per contract till final approval is given to associates for such termination.

22.3 Termination for Convenience of TPC

TPC at its sole discretion may terminate the contract by giving 30 days prior notice in writing or through email to the Associate. TPC shall pay the Associate for all the supplies/ services rendered till the actual date of contract termination against submission of invoice by the Associate to that effect.

23.0 DISPUTE RESOLUTION & ARBITRATION

In case of any dispute or difference the parties shall endeavour to resolve the same through conciliatory and amicable measures within 15 Days failing which the matter may be referred by either party for resolution by the sole arbitrator to be appointed mutually by both the parties. The arbitral proceedings shall be conducted in accordance with Arbitration and Conciliation Act

GENERAL CONDITIONS OF CONTRACT

1996 and the place of arbitration shall be Bhubaneswar. The language to be used at proceedings shall be English and the award of the arbitrator shall be final and binding on the parties. The parties shall bear their respective costs of arbitration. The associate shall continue to discharge its obligations towards due performance of the works as per the terms of the contract during the arbitration proceedings unless otherwise directed in writing by TPC or suspended by the arbitrator. Further, TPC shall continue making such payments as may be found due and payable to the associate for such works.

23.1 Governing Laws and Jurisdiction

The parties shall be subject to the jurisdiction of the courts of law in Bhubaneswar and any matter arising here from shall be subject to applicable law in force in India.

24.0 ATTRIBUTES OF GCC

24.1 Cancellation

The Company reserves the right to cancel, add, delete at its sole discretion, all or any terms of this GCC or any contract, order or terms agreed between the parties in pursuance without assigning any reasons and without any compensation to the Associates.

24.2 Severability

If any portion of this GCC is held to be void, invalid, or otherwise unenforceable, in whole or part, the remaining portions of this GCC shall remain in effect.

24.3 Order of Priority

In case of any discrepancies between the stipulations in General Conditions of the Contract (GCC) and Special Conditions of Contract (SCC), the GCC shall stand superseded by the SCC to the extent stipulated hereinabove while balance portion of respective clauses of GCC shall continue to be applicable.

25.0 ERRORS AND OMISSIONS

The Associate shall be responsible for all discrepancies, errors and omissions in the drawings, documents or other information submitted by him, irrespective of whether these have been approved, reviewed or otherwise accepted by the TPC or not. However any error in design/drawing arising out of any incorrect data/written information from TPC will not be considered as error and omissions on part of the Associate.

26.0 TRANSFER OF TITLES

The title of ownership and property to all equipment, materials, drawings & documents shall pass to the TPC on acceptance of material by store/site after Inspection.

However, such passing of title of ownership and property to the TPC shall not in any way absolve, dilute or diminish the responsibility and obligations of the Associate under this Contract including loss or damages and all risks, which shall vest with the Associate.

27.0 INSURANCE

The Contractor shall take out the Insurance Policies which shall cover all risks including the following, as applicable:-

a) The value of the policy shall cover the total value of all the items till they are handed over to TPC.

GENERAL CONDITIONS OF CONTRACT

b) TPC shall be the principal holder of the policy. The Associate shall be the loss payee under the policy. Associate / Sub-contractor of the Associate shall not be holders or beneficiaries in the policy nor shall they be named in the policy. TPC reserves the exclusive right to assign the policy.

c) While the payment of premium may be phased in agreement with the insurance company, at no time shall goods and services required to be provided by the associate shall remain uninsured in accordance with (a) above.

d) A copy of the Insurance policy shall be made available to TPC prior to first dispatch lot of any Equipment and policy shall be kept alive and valid at all times up to the stage of final acceptance.

e) TPC reserves the right to take out whatever policy that is deemed necessary by him if the associate fails to keep the said policy alive and valid at all times and/or causes lapses in payment of premium thereby jeopardizing the said policy. The cost of such policy(s) shall be recovered / deducted from the amount payable to the associate.

f) The policy shall ensure that the TPC's decision regarding replacement of goods damaged, lost or rendered unusable shall be final.

In all cases, the associate shall lodge the claims with the underwriters and also settle the claims and shall also notify TPC of any filed claims. However, the associate shall proceed with the repairs and/or replacement of the equipment/components without waiting for the settlement of the claims. In case of seizure of materials by concerned authorities, the associate shall arrange prompt release against bond, security or cash as required. TPC, upon request by the associate, will extend all reasonable assistance to the associate in such a case.

All the insurance claims shall be processed and settled by the associate and the missing/damaged items shall be replaced/repaired by them without any extra cost to TPC and without affecting the completion time.

28.0 SUGGESTIONS & FEEDBACK

We welcome all our Business Associates to write to us about their experience with TPC; be it our Company, our services or our people. Each and every concern, issue, query and suggestion from you will help us to become a better company to work with and shall help us develop a strong bonding of trust and a long term relationship with you.

You may send your feedback by filling up our Business Associate Feedback Form enclosed herewith as *Annexure-I.* You can also log on to our website www.tatapower.com to provide your feedback.

- Suggestions for us
- Feedback form
- Knowledge Sharing/ Experience with TPC
- Any issues with TPC.

Submission of feedback form is mandatory before the release of final payment to the BA.

29.0 CONTACT POINTS

In case Business Associate needs information with respect to payments or has any grievances, same may be lodged by log on to our website www.tatapower.com

GENERAL CONDITIONS OF CONTRACT

30.0 LIST OF ANNEXURES

S. No.	Subject	Annexure
1.	Performa for Bid Security Bank Guarantee	A
2.	Performa for Performance Bank Guarantee (CP cum EP)	B
3.	Performa for No Demand Certificate by Associate	C
4.	Performa For Application For Issuance of Consolidated TDS Certificate	D
5.	Business Associate Feedback Form	E
6.	Acceptance Form For Participation In Reverse Auction Event	F
7.	Form for RTGS Payment	G
8.	Vendor Appraisal Form	H
9.	Manufacturer Authorization Form	I
10.	Tata Code of Conduct	I

GENERAL CONDITIONS OF CONTRACT

ANNEXURE-A

PROFORMA FOR BID SECURITY BANK GUARANTEE

The Tata Power Company Limited
Mumbai

WHEREAS, (Name of the Bidder) _____
(hereinafter called "the BIDDER") has submitted his bid dated_____ for the (Tender No. & Name of Contract) _____ (hereinafter called "the BID").

KNOW ALL men by these presents we (Name of the Bank) _____ of (Name of the Country) _____ having our registered office at_____(hereinafter called "the BANK) are bound unto The Tata Power Company Limited (TPC) in the sum of _____ for which payment well and truly to be made to the TPC the Bank binds himself, his successors and assigns by these presents.

SEALED with the Common Seal of the said Bank this _____ day of _____ 20_____.

The CONDITIONS of this obligation are**:**

i) If the Bidder withdraws his Bid during the period of bid validity specified in the Proforma of Bid or

ii) If the Bidder having been notified of the acceptance of his Bid by the TPC during the period of bid validity fails or refuses to furnish the Contract Performance Bank Guarantee, in accordance with the Instructions to Bidders.

We undertake to pay the TPC upto the above amount upon receipt of its first written demand, provided that in its demand the TPC will note that amount claimed by it is due to it owing to the occurrence of one or both conditions, specifying the occurred condition or conditions.

This Guarantee will remain in force upto and including the date (No of days as mentioned in tender enquiry) days after the closing date of submission of bids as stated in the Invitation to Bid or as extended by you at any time prior to this date, notice of which extension to the Bank being hereby waived, and any demand in respect thereof should reach the Bank not later than the above date.

DATE …… **SIGNATURE OF THE BANK** ……..
WITNESS …… **SEAL** ……..
(Signature, Name & Address) (At least 2 witnesses)

GENERAL CONDITIONS OF CONTRACT

ANNEXURE- B

PROFORMA FOR PERFORMANCE BANK GUARANTEE (CP cum EP)

(On Rs.100/- Stamp Paper) Note:

a) Format shall be followed in toto
b) Claim period of one month must be kept up
c) The guarantee to be accompanied by the covering letter from the bank confirming the signature to the guarantee

---

The Tata Power Company Limited

Mumbai

CP cum EP BG No…….

Order/Contract No……dated……

1. You have entered into a Contract No _____ with M/s._____ (hereinafter referred to as "the Vendor") for the supply cum erection / civil work of _____ (hereinafter referred to as" the said Equipment") for the price and on the terms and conditions contained in the said contract.
2. In accordance with the terms of the said contract, "the Vendor" agreed to furnish you with an irrevocable, unconditional and acceptable bank guarantee for 10% of the value of contract and to be valid till the end of Guarantee period plus one month towards "Contract cum Equipment performance". For this purpose you have agreed to accept the guarantee.
3. In consideration thereof, we, _____ hereby irrevocably and unconditionally guarantee to pay to you on demand but in any case before the end of five working days from the date of the claim and without demur and without reference to "the Vendor" such amount or amounts not exceeding the sum of Rs._____ (Rupees _____ only) being _____% (_____ percent) of the total value of the contract on receipt of your intimating that "the Vendor" has not fulfilled his contractual obligations. You shall be the sole judge for such non-fulfillment and "the Vendor" shall have no right to question such judgment.
4. You shall have the right to file / make your claim on us under the guarantee for a **further period of one month** from the date of expiry.
5. This guarantee shall not be revoked without express consent and shall not be affected by your granting time or any other indulgence to "the Vendor", which shall include but not be limited to, postponement from time to time of the exercise the same in you or any right which you may have against "the Vendor" and to exercise the same in any covenant contained or implied in the said contract or any other course or remedy or security available to you, and our Bank shall not be released from its obligations under this guarantee by

GENERAL CONDITIONS OF CONTRACT

your exercising any of your rights with reference to matters aforesaid or any of them or by reasons of any other act or forbearance or other acts of omission or commission on your part or any other indulgence shown by you or by any other matter or thing whatsoever which under the law would, but for this provision have the effect of relieving our bank from its obligation under this guarantee.

6. We also agree that you shall be entitled at your option to enforce this guarantee against our bank as a principal debtor, in the first instance, notwithstanding any other security or guarantee that you may have in relation to “the Vendor’s” liabilities in respect of the premises
7. This guarantee shall not be affected by any change in the constitution of our Bank or “the Vendor” or for any other reason whatsoever.
8. Any claim / extension under the guarantee can be lodge-able at outstation banks or at Mumbai branch and claim will also be payable at Mumbai Branch (to be confirmed by Mumbai Branch by a letter to that effect in case BG is from the branch outside Mumbai).
9. Notwithstanding anything herein contained, our liability under this guarantee is limited to Rs._____ (Rupees_____ only and the guarantee will remain in force upto and including _____(Date) and shall be extended from time to time for such period or period as may be desired by “the Vendor”.
10. Unless a demand or claim under this guarantee is received by us in writing within one months from_____ (expiry date) i.e. on or before _____ (claim period end date), we shall be discharged from all liabilities under this guarantee thereafter.

Dated at_____ this_____ day of _____ 20__

Bank’s rubber stamp

1. Banks full address

Designation of Signatory

2. Bank official number

GENERAL CONDITIONS OF CONTRACT

ANNEXURE-C

PROFORMA FOR "NO DEMAND CERTIFICATE" BY ASSOCIATE

(On Company's Letter head or with Company Seal)
(To be submitted by the Associate to TPC Accounts Department at the time of receipt of full and final payment)

(Certificate No. CCP/002)

Name of the Project Order/

Contract No.

Dated

Name of the Associate Scheme

No. / Job No.

We, M/s._____ (Associate) do hereby acknowledge and confirm that we have received the full and final payment due and payable to us from TPC, in respect of our aforesaid Order No _____ dated_____ including amendments, if any, issued by TPC to our entire satisfaction and we further confirm that we have no claim whatsoever pending with TPC under the said contract / W.O.

Notwithstanding any protest recorded by us in any correspondence, documents, measurement books and / or final bills etc., we waive all our rights to lodge any claim or protest in future under this contract.

We are issuing this "NO DEMAND CERTIFICATE" in favour of TPC, with full knowledge and with our free consent without any undue influence, misrepresentation, coercion etc.

Place **Name**

(Company Seal)

GENERAL CONDITIONS OF CONTRACT

ANNEXURE-D

PROFORMA FOR APPLICATION FOR ISSUANCE OF CONSOLIDATED TDS CERTIFICATE

To be printed on the letterhead

To,

The Tata Power Company Limited,

Bhubaneswar

Sub: Application for issuance of Consolidated TDS Certificate for the FY _____

Dear Sir,

I / we hereby request / authorize you to issue me / us a consolidate TDS Certificate for the financial year _____ against tax deducted at source by you from my / our payments / bills during the said year from time to time under Chapter XVII – B of the Income Tax Act, 1961.
For and on behalf of

Signature

Name

Address

Contact No. (Land Line)

(Mobile)

PAN #

Assessing authority

ATTACH THE COPY OF PAN CARD

GENERAL CONDITIONS OF CONTRACT

ANNEXURE-E

BUSINESS ASSOCIATE FEEDBACK FORM

With an objective to improve our internal processes and systems, and serve you better, we solicit your valuable feedback & suggestions. It is estimated that it will take about 10 minutes to complete this survey. We assure you that your feedback shall be kept confidential. Please send the duly filled feedback form in the "TPC addressed - attached envelop"

You are associated with us as

☐ OEMs ☐ Service Contractor ☐ Material Suppliers ☐ Material & Manpower Supplier

You are associated with us for

☐ Less than 1 year ☐ More than 1 year but less than 3 years ☐ More than 3 years

Your office is located at

☐ Bhubaneswar ☐ Within 200 kms from Bhubaneswar ☐ More than 200 kms from Bhubaneswar

Your nearly turnover with TPC

☐ Less than 25 Lacs ☐ 25 Lacs to 1 Crore ☐ More than 1 Cr.

Additional Information

Your Name	
Your Designation	
Your Organization	
Contact Nos.	
Email	

We once again thank you for your participation in this survey. Please spare 10 minutes to give your feedback on following pages (Section A to E)

GENERAL CONDITIONS OF CONTRACT

SECTION – A

(Please √ mark in the relevant box and give your remarks / suggestions / information for our improvement).

S. No.	Parameters	1 Do Not Agree	2 Slightly in Agreement	3 In Fair Agreement	4 Mostly in Agreement	5 Fully Agree	Remarks/ Suggestion
1	You receive all relevant queries / tenders from us in timely manner.						
2	We provide you enough lead time to respond to our queries / tenders.						
3	We provide you adequate support (drawings, documents, clarifications, briefing etc.) to enable you meet our requirements.						
4	All following elements of our contract / purchase order are rational :						
4.1	Scope of Work						
4.2	Delivery / Execution Schedule						
4.3	Payment Terms						
4.4	Liquidated Damages						
4.5	Performance Guarantee						
5	Our purchase orders / contracts are simple, specific & easy to understand						
6	TPC demonstrate willingness to be flexible in administration of Contract / Purchase Order						
7	We provide timely responses / clarifications to your queries						
8	TPC representative you interact / coordinate with is adequately empowered to support you in meeting contractual obligations						
9	TPC provide you all necessary infrastructure support for timely and quality completion of work (including AMC)						
10	TPC Engineer-in-Charge timely certifies the jobs executed/ material supplied						
11	TPC Engineer-in-Charge efficiently supervises the job execution for timely completion of job						
12	BIRD (Bill Inward Receipt Desk) initiative has improved payment disbursement process						

GENERAL CONDITIONS OF CONTRACT

S. No.	Parameters	1 Do Not Agree	2 Slightly in Agreement	3 In Fair Agreement	4 Mostly in Agreement	5 Fully Agree	Remarks/ Suggestion
13	Our approach for Inspection and Quality Assurance effective to expedite project completion?						
14	TPC never defaults on contractual terms						
15	In TPC Contracts closure is done within set time limit						
16	Our material receiving procedures are well defined and efficiently deployed to reduce mutual inconvenience						
17	Bank Guarantees are released in time bound manner						
18	Our processes related to payment / account settlement are effective.						
19	You get payments on time						
20	TPC Employees follow Ethical behaviour						

GENERAL CONDITIONS OF CONTRACT

SECTION – B

SECTION – B (Please rate the following parameters on a scale of 1 to 5, where 1 - Minimum; 5 - Maximum)

S. No.	Parameters	1	2	3	4	5	Remarks/ Suggestion
1	How do you rate courtesy/ empathy/ attitude level and warmth of TPC employees you interact with from following team?						
1.1	Project Engineering						
1.2	District / Zones						
1.3	Projects/HOG (TS &P)						
1.4	Inspection & Quality Assurance						
1.5	Stores						
1.6	Metering & Billing						
1.7	Accounts / Finance						
1.8	Administration						
1.9	IT & Automation						
2	How would you rate TPC in comparison to your other clients in terms of **fairness of treatment and transparency** with its Business Associates?						
3	How would you rate TPC in comparison to your other clients in terms of **processes and systems to manage partnership** with its Business Associates						
4	How would you rate TPC in comparison to your other clients in terms of **building long term & mutually relationship** with its Business Associates						

SECTION – C

Please √ mark in the relevant box and give your remarks / suggestions / information for our improvement.

S. No.	Parameters	Certainly No	Probably No	Certainly Yes	Probably Yes	Remarks/ Suggestion
1	Based on your experience with TPC, would you like to continue your relationship with TPC?					
2	If someone asks you about TPC, would you talk “positively” about TPC?					

GENERAL CONDITIONS OF CONTRACT

3	Would you refer TPC name to others in your community, fraternity and society as a professional & dynamic organization?					

SECTION - D

If we ask you to rate us on a scale of 1 to 10, how will you rate TPC, that truly represents your overall satisfaction with us (please tick appropriate box) -

1	2	3	4	5	6	7	8	9	10

SECTION – E

Please √ mark in the relevant box and give your remarks / suggestions / information for our improvement.

Please spare your thoughts for TPC's improvement in particular areas of weaknesses, particularly relating to some great practices, attitudes that you have seen elsewhere in Indian and International Organizations, which you recommend TPC to adopt. Please give your valuable salient recommendations.

Please spare your thoughts for TPC's improvement in particular areas of major concerns for you. We also welcome your suggestions to adopt any best practices, altitudes that you

Recommendation	*Please tick (√) your top 5 expectations out of the following 10 points listed below -*	
(Please list down improvement you expect from TPC)	*Timely payment*	
1	*Flexibility in Contracts/PO*	
	Clarity in PO,s & Contracts	
2	*Timely response to quarries*	
	Timely certification of works executed	
3	*Clarity in Specs, drawings, other docs etc.*	
	Adequate information provided on website for tender notification, parties qualified etc.	
4	*Timely receipt of material at site for execution*	
	Performance Guarantee/EMD released in time	
5	*Inspection & quality assurance support for timely job completion*	

We thank you for your time and courtesy!!

GENERAL CONDITION OF CONTRACT

ANNEXURE-F

ACCEPTANCE FORM FOR PARTICIPATION IN REVERSE AUCTION EVENT

(To be signed and stamped by the bidder prior to participation in the auction event)

In a bid to make our entire procurement process more fair and transparent, TPC intends to use the reverse auctions through SAP-SRM tool as an integral part of the entire tendering process. All the bidders who are found as technically qualified based on the tender requirements shall be eligible to participate in the reverse auction event.

The following terms and conditions are deemed as accepted by the bidder on participation in the bid event:

1. TPC shall provide the user id and password to the authorized representative of the bidder. (Authorization Letter in lieu of the same shall be submitted along with the signed and stamped Acceptance Form).
2. TPC will make every effort to make the bid process transparent. However, the award decision by TPC would be final and binding on the supplier.
3. The bidder agrees to non-disclosure of trade information regarding the purchase, identity of TPC, bid process, bid technology, bid documentation and bid details.
4. The bidder is advised to understand the auto bid process to safeguard themselves against any possibility of non-participation in the auction event.
5. In case of bidding through Internet medium, bidders are further advised to ensure availability of the entire infrastructure as required at their end to participate in the auction event. Inability to bid due to telephone line glitch, internet response issues, software or hardware hangs, power failure or any other reason shall not be the responsibility of TPC.
6. In case of intranet medium, TPC shall provide the infrastructure to bidders. Further, TPC has sole discretion to extend or restart the auction event in case of any glitches in infrastructure observed which has restricted the bidders to submit the bids to ensure fair & transparent competitive bidding. In case an auction event is restarted, the best bid as already available in the system shall become the start price for the new auction.
7. In case the bidder fails to participate in the auction event due any reason whatsoever, it shall be presumed that the bidder has no further discounts to offer and the initial bid as submitted by the bidder as a part of the tender shall be considered as the bidder's final no regret offer. Any offline price bids received from a bidder in lieu of non-participation in the auction event shall be out rightly rejected by TPC.
8. The bidder shall be prepared with competitive price quotes on the day of the bidding event.
9. The prices as quoted by the bidder during the auction event shall be inclusive of all the applicable taxes, duties and levies and shall be FOR at TPC site.
10. The prices submitted by a bidder during the auction event shall be binding on the bidder.
11. No requests for time extension of the auction event shall be considered by TPC.
12. The original price bids of the bidders shall be reduced on pro-rata basis against each line item based on the final all inclusive prices offered during conclusion of the auction event for arriving at Contract amount.

Signature & Seal of the Bidder

GENERAL CONDITIONS OF CONTRACT

ANNEXURE-G

To,

DGM (Finance)
The Tata Power Company Limited
Bhubaneswar

Sub: **e-Payments through National Electronic Fund Transfer (NEFT) OR Real Time Gross Settlement System (RTGS)**

Dear Sir,

We request and authorize you to affect e-payment through NEFT/RTGS to our Bank Account as per the details given below:-

Vendor Code :

Title of Account in the Bank :

Account Type :

(Please mention here whether account is Savings/Current/Cash Credit)

Bank Account Number :

Name & Address of Bank :

Bank Contact Person's Names :

Bank Tele Numbers with STD Code :

Bank Branch MICR Code :

(Please enclose a Xerox a copy of a cheque. This cheque should not be a payable at par cheque)

Bank Branch IFSC Code :

(You can obtain this from branch where you have your account)

Email Address of accounts person: :
(to send payment information)

GENERAL CONDITIONS OF CONTRACT

Name of the Authorized Signatory: :

Contact Person's Name:

Official Correspondence Address:

We confirm that we will bear the charges, if any, levied by our bank for the credit of NEFT/RTGS amounts in our account. Any change in above furnished information shall be informed to TPC well in time at our own. Further, we kept TPC indemnified for any loss incurred due to wrong furnishing of above information.

Thanking you,

For _____

(Authorised Signatory)

(Signature with Rubber Stamp)

Certification from Bank:

We confirm that we are enabled for receiving NEFT/RTGS credits and we further confirm that the account number (specify Bank a/c no.) of (Please mention here name of the account holder), the signature of the authorised signatory and the MICR and IFSC Code of our branch mentioned above are correct.

This also is certified that the above information is correct as per Bank record

(Manager's/ Officers Signature under Bank Stamp)

GENERAL CONDITIONS OF CONTRACT

ANNEXURE-H

VENDOR APPRAISAL FORM

TO BE SUBMITTED BY VENDOR (To be filled as applicable)			
Part A			
1.0	**DETAILS OF THE FIRM**		
	1.1	NAME (IN CAPITAL LETTERS)	
	1.2	TYPE OF CONCERN (PROPRIETORY) PARTNERSHIP PVT.LTD., PUBLIC LTD. ETC.	
	1.3	YEAR OF ESTABLISHMENT	
	1.4	LOCATION OF OFFICE POSTAL ADRESS	
	1.5	CONTACT DETAIL OF BA's REPRESENTATIVE NAME E-MAIL ID CELL NO.	
	1.6	LOCATION OF MANUFACTURING UNITS	:
		i) UNITS 1	:
		ii) OTHER UNITS	:
2.0	**PRODUCTS / SERVICES BEING OFFERED**		:
3.0	**TURNOVER DURING THE LAST 3 YEARS (TO BE VERIFIED WITH THE LATEST PROFIT & LOSS STATEMENT).**		:
4.0	**AVALABILITY OF STATUTORY DOCUMENTS I.E. COPY OF PAN CARD**		:
5.0	AVALABILITY OF STATUTORY DOCUMENTS I.E. COPY OF **GST REGISTRATION**		÷
6.0	**APPLICABILITY UNDER MSME CERTIFICATION**		÷
7.0	**BA BELONGS TO AA COMMUNITY (SC/ST)**		÷
8.0	**DOCUMENTS VERIFYING ADDRESS PROOF (SUPPORTED BY ANY GOVT. ISSUED DOCUMENT)**		÷

GENERAL CONDITIONS OF CONTRACT

9.0	**TECHNICAL**		
	9.1	NO.OF DESIGN ENGINEERS (INDICATE NO.OF YEARS EXPERIENCE IN RELATED FIELDS)	:
	9.2	NO.OF DRAUGHTSMEN	:
	9.3	COLLABORATION DETAILS (IF ANY)	:
		9.3.1 DATE OF COLLABORATION	:
		9.3.2 NAME OF COLLABORATOR	:
		9.3.3 RBI APPROVAL DETAILS	:
		9.3.4 EXPERIENCE LIST OF COLLABORATOR	:
		9.3.5 DURATION OF AGREEMENT	:
	9.4	AVAILABILITY OF STANDAR0DS / DESIGN PROCEDURES / COLLA-BORATOR'S / DOCUMENTS (CHECK WHETHER THESE ARE LATEST/CURRENT	:
	9.5	TECHNICAL SUPPORT, BACK-UP GUARANTEE, SUPERVISION, QUALITY CONTROL BY COLLABORATOR (WHEREVER ESSENTIAL). (THIS CLAUSE IS RELEVANT WHEN VENDOR'S EXPERIENCE IS INADEQUATE)	:
	9.6	QUALITY OF DRAWINGS	:
10.0	**MANUFACTURE**		
	10.1	SHOP SPACE, LAYOUT LIGHTING, VENTILATION, ETC.	:
	10.2	POWER (KVA)	:
		MAINS INSTALLED	:
		UTILISED	:
		STANDBY POWER SOURCE	:
	10.3	MANUFACTURING FACILITIES (ATTACH LIST OF EQUIPMENTS AS APPLICABLE)	:
		10.3.1 MATERIAL HANDLING	:
		10.3.2 MACHINING	:
		10.3.3 FABRICATION	:

GENERAL CONDITIONS OF CONTRACT

		10.3.4 HEAT TREATMENT	:
		10.3.5 BALANCING FACILITY	:
		10.3.6 SURFACE TREATMENT PRIOR TO PAINTING/ COATING, POLISHING, PICKLING, PASSIVATION, PAINTING, ETC.	:
	10.4	SUPERVISORY STAFF	:
	10.5	ADEQUACY OF SKILLED LABOURS (MACHINISTS, WELDERS, ETC.)	:
	10.6	NO. OF SHIFTS	:
	10.7	TYPE OF MATERIAL HANDLED (SUCH AS CS, SS, ETC.)	
	10.8	WORKMANSHIP	:
	10.9	MATERIAL IN STOCK AND VALUE	:
	10.10	TRANSPORT FACILITIES	:
	10.11	CARE IN HANDLING	:
11.0	**INSPECTION / QC / QA / TESTING**		
	11.1	NUMBER OF PERSONNEL (INDICATE NO.OF YEARS OF EXPERIENCE)	:
	11.2	INDEPENDENCE FROM PRODUCTION	:
	11.3	AVAILABILITY OF PROCEDURAL WRITE UP/QUALITY PLAN	:
	11.4	INCOMING MATERIAL CONTROL AND DOCUMENTATION	:
	11.5	RELIABILITY/REPUTATION OF SUPPLY SOURCES	:
	11.6	STAGE INSPECTION AND DOCUMENTATION	:
	11.7	SUB-ASSEMBLY & DOCUMENTATION	:
	11.8	FINAL INSPECTION AND DOCUMENTATION	:
	11.9	PREPARATION OF FINAL DOCUMENTATION PACKAGE	:
	11.10	TYPE TEST FACILITIES	:
	11.11	ACCEPTANCE TEST FACILITIES	:

GENERAL CONDITIONS OF CONTRACT

	11.12	CALIBRATION OF INSTRUMENTS AND GAUGES (WITH TRACEABILITY TO NATIONAL STANDARDS) (ATTACH LIST)	:
	11.13	STATUTORY APPROVALS LIKE BIS, IBR, ETC.(AS APPLICABLE)	:
	11.14	SUB-VENDOR APPROVAL SYSTEM AND QUALITY CONTROL	:
	11.15	DETAILS OF TESTS CARRIED OUT AT INDEPENDENT RECOGNISED LABORATORIES	:
		i) FURNISH LIST OF TESTS CARRIED OUT AND THE NAME OF THE LABORATORY WHERE THE TESTS WERE CONDUCTED	:
		ii) CHECK AVAILABILITY OF CERTIFICATES AND REVIEW THESE WHEREVER POSSIBLE	:
12.0	**EXPERIENCE (INCLUDING CONSTRUCTION / ERECTION / COMMISSIONING) TO BE FURNISHED IN THE FORMAT INDICATED IN APPENDIX)**		:
13.0	**SALES, SERVICE AND SITE ORGANISATIONAL DETAILS**		:
14.0	**CERTIFICATE FROM CUSTOMERS (ATTACH COPIES OF DOCUMENTS)**		:
15.0	**POWER SITUATION**		:
16.0	**LABOUR SITUATION**		:
17.0	**APPLICABILITY OF SC/ST RELAXATION (Y/N)** **IF YES, SUPPORTING DOCUMENTS TO BE ATTACHED**		
Part C Supporting Documents			

GENERAL CONDITIONS OF CONTRACT

18.0	**DOCUMENTS TO BE ENCLOSED:** 1. Factory License 2. ISO Certificate 3. Registration of Central Excise 4. Income Tax Clearance. 5. PF Registration 6. ESI Registration 7. Insurance for Workman Compensation Act No. 8. Electrical Contract LIC No. 9. PAN No. 10. GST Registration 11. MSME Certification 12. WC Tax Registration 13. Organogram of Co. having organogram of Design, safety, quality, production and other teams. 14. Details of subscription of BIS, IEC, IEE, ASTM or other. 15. Details of the team in Design, Quality, Safety, Production. 16. List of manufacturing equipment as per Part C. 17. List of calibrated equipment as per Part C. 18. List of clients and order executed in past two years. 19. Complaint escalation matrix. 20. Performance Certificates of same product from Minimum two utilities. **21. e-Payment Form as per enclosed Annexure-G**	

*** Classification of BA s under SC/ST shall be governed under following guidelines:**

- **Proprietorship/ Single Ownership Firm:** Proprietor of the firm should be from SC/ST community. Governing document shall be Proprietorship Deed.
- **Partnership Firm:** Only such firms shall qualify which have SC/ST partners holding equal to or more than 50% of the total ownership pattern of the firm. Governing document shall be Partnership Deed.
- **Private Limited Company:** Only such firms shall qualify which have SC/ST directors holding equal to or more than 50% of the total ownership pattern of the firm. Governing document shall be Memorandum of Understanding (MoU) and/or Article of Association (AoA).
- The relaxation available for BAs under SC / STs shall be as per GCC for Tender Fees, EMD, PBG and Turnover criteria.

NOTE: Certification from SC/ST Commission shall be required for deciding upon SC/ST status of a person.

Annexure-G (e-Payment detail form) must be filled by Associate along with this form.

GENERAL CONDITIONS OF CONTRACT

ANNEXURE-I

MANUFACTURER AUTHORIZATION FORM

(To be submitted on OEM's Letter Head)

Date: …….

Tender Enquiry No.: ……..

To,

Chief (Procurement & Stores)

The Tata Power Company Limited,
Mumbai

Sir,

WHEREAS M/s. *[name of OEM]*, who are official manufacturers of …… having factories at *[address of OEM]* do hereby authorize M/s *[name of bidder]* to submit a Bid in relation to the Invitation for Bids indicated above, the purpose of which is to provide the following Goods, manufactured by us

……and to subsequently negotiate and sign the Contract.

We hereby extend our full guarantee and warranty in accordance with the Special Conditions of Contract or as mentioned elsewhere in the Tender Document, with respect to the Goods offered by the above firm in reply to this Invitation for Bids.

We hereby confirm that in case, the channel partner fails to provide the necessary services as per the Tender Document referred above, M/s *[name of OEM]* shall provide standard warranty on the materials supplied against the contract. The warranty period and inclusion / exclusion of parts in the warranty shall remain same as defined in the contract issued to their channel partner against this tender enquiry.

Yours Sincerely,

For ……..

Authorized Signatory

GENERAL CONDITIONS OF CONTRACT

Annexure-J

TATA CODE OF CONDUCT (TCoC)

Introducing Tata Code of Conduct (TCoC) in GCC, the following clause is proposed for inclusion as per suggestions from Chief Ethics Counsellor -

"TCoC is the overarching policy framework that applies to all TATA Group companies including TPC. TCoC provides for stakeholder-wise approach in each of the seven chapters.

The chapter "Our Value Chain Partners" states the policy as follows:

1. We shall select our suppliers and service providers fairly and transparently.
2. We seek to work with suppliers and service providers who can demonstrate that they share similar values. We expect them to adopt ethical standards comparable to our own.
3. Our suppliers and service providers shall represent our company only with duly authorized written permission from our company. They are expected to abide by the Code in their interactions with, and on behalf of us, including respecting the confidentiality of information shared with them.
4. We shall ensure that any gifts or hospitality received from, or given to, our suppliers or service providers comply with our company's gifts and hospitality policy.
5. We respect our obligations on the use of third party intellectual property and data.

To effectively implement TCoC, there is a 3-tier framework comprising of Ethics Management Apex Team headed by the CEO, who is also the Principal Ethics Officer (PEO), TPC; Locational Ethics Counsellors (LECs) who cover various locations/offices of TPC; and LECs are assisted by 4-5 Ethics Champions (ECs).

In case any Ethical Concern is faced during the course of your business dealings with TPC, one may utilize any one or more of the following avenues:

1. Ethics Portal on website – www.tatapower-ddl.com
2. Email-ID – ethics@tatapower-ddl.com
3. Ethics Box
4. IVRS No. 19124 and then press 7
5. Locational Ethics Counsellor (LEC)
6. **Third Party Ethics Helpline – 1800-22-7697 (Toll Free) ***
7. Chief Ethics Counsellor – Mr. Sunil Kumar Sharma at sunilk.sharma@tatapower-ddl.com

TPC is committed to follow Core Values and Core Principles mentioned in TCoC, cited below, in carrying out various activities as well as in discharge of bi-lateral and multi-lateral obligations involving other entities/organizations:

Core Values:

All six core values are already mentioned in GCC.

Core Principles:

GENERAL CONDITIONS OF CONTRACT

1. **Zero tolerance to bribery or corruption** in any form.
2. Committed to **good corporate citizenship**
3. Contribute to the **economic development of the communities** of the countries & regions we operate in.
4. No compromise on **Safety**
5. Our conduct shall be **fair & transparent**
6. Respect the **human rights & dignity** of our stakeholders
7. **No unfair discrimination** of any kind
8. Statements made to stakeholders shall be **truthful** & made in **good faith**
9. Not engage in any restrictive or **unfair trade practice**
10. Provide avenues for our stakeholders to **raise concerns in good faith**
11. Environment **free from fear** of retribution to deal with concerns that are raised
12. Expect the leaders to be **role model**
13. **Comply with the laws** of the countries in which we operate

Gift Policy:

Principles for acceptance of gifts/benefits –

A gift or benefit may be accepted only if it complies with all of the following principles:

- ✓ it does not influence,
- ✓ does not have the potential to influence, an employee in such a way as to compromise or appear to compromise integrity and impartiality
- ✓ does not create a conflict of interest or perception of conflict of interest;

Principles for non-acceptance of gifts/benefits -

The gift or benefit may not be accepted or given if any of the following principles apply:

- ✓ causes the recipient or donor **to act in partial manner** in the course of duty
- ✓ apprehension of the recipient becoming **obligated to the donor**
- ✓ it is **not offered openly**
- ✓ if is an **offer of money** or something readily convertible to money (e.g. Shares)

Violation –

1. Not abiding with this policy would constitute violation of “Our Employees” Stakeholder group Clause “Gifts and Hospitality” of the Tata Code of Conduct (TCoC) 2015. Prompt action will be taken against violations.
2. Any deviation from this policy must be supported by appropriate rationale and must be duly approved by CEO who is also the Principal Ethics Officer. In any case, in dealing with such deviations, the spirit of the TCoC should in no case be compromised.
2. If it is determined that an employee / associate has violated this policy, appropriate action including termination of the employee’s / associate’s employment or association with TPC may be decided upon.

GENERAL CONDITIONS OF CONTRACT

GENERAL CONDITIONS OF CONTRACT

TATA POWER

For Reference- User Manual e-Bidding & Auction (Ariba)

CONFIDENTIAL

SUPPLIER MANUAL ANSWERING TO E-BIDDING

	Version 1.2
Company Confidential	DEC - 2020

INDEX

1 ACCESSING ARIBA SOURCING 3

2 VENDOR SCREEN.....4

2.1.1 Review and Approve "Prerequisites" 5

2.1.2 Select Items or Lots 6

2.1.3 Entering Your Prebid 6

2.1.4.1 How to submit a price.....9

3 COMMUNICATING WITH TATA POWER BUYER DURING E-BIDDING.....7

4 ARIBA TRAINING AND ARIBA SUPPORT …….....8

5 SUPPLIER FREQUENTLY ASKED QUESTION 11

1- Accessing Ariba Sourcing

Step 1: You will get an invitation to your email from Ariba System. Keep this email, it contains your login Information and a direct link to Ariba.

Step 2: Click “Click Here” to access the Ariba Web Site.

Step 3: Supplier has to click on "Continue"

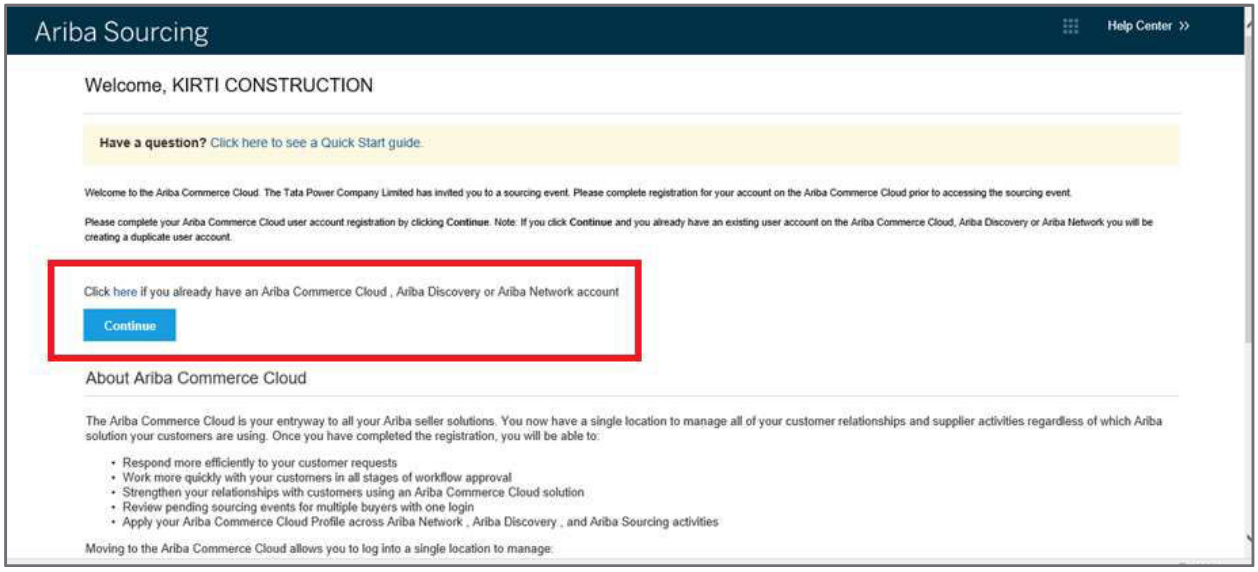

Step 4: The registration process only takes a few moments, with a simple one-page registration Define your password and secret question. Click “OK”

Step 5: If it's the first time you are invited to use UPM Ariba, you'll need to accept the "Participant Terms". Select "I accept the terms of this agreement". Click "Submit".

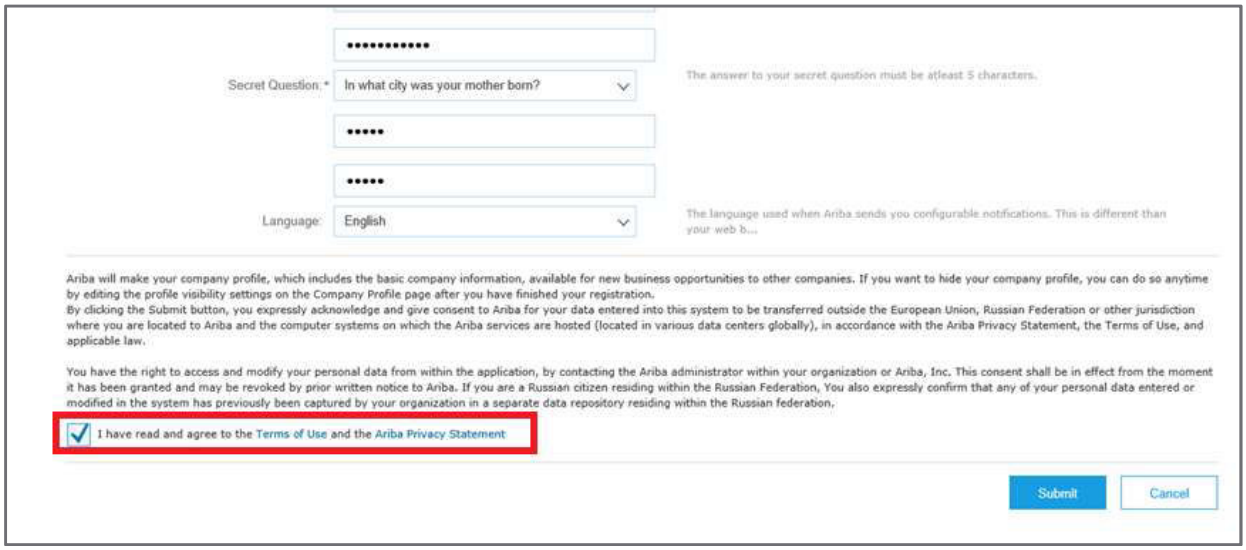

2 Vendor Screen - Submitting Your Answers / Proposal

2.1.1 If vendor goes through mail invitation then directly Screen 3.1.1 will appear, but if If you have used Ariba before and have already accessed an event for the buyer-specific account with your current log in ID, click the **Login** button to continue. Log in with your Ariba username and password in order to participate in the event OR you have to follow the following steps.

Step 1 - Log on **supplier.ariba.com**

Step 2 - Put your USER ID and Password in following screen

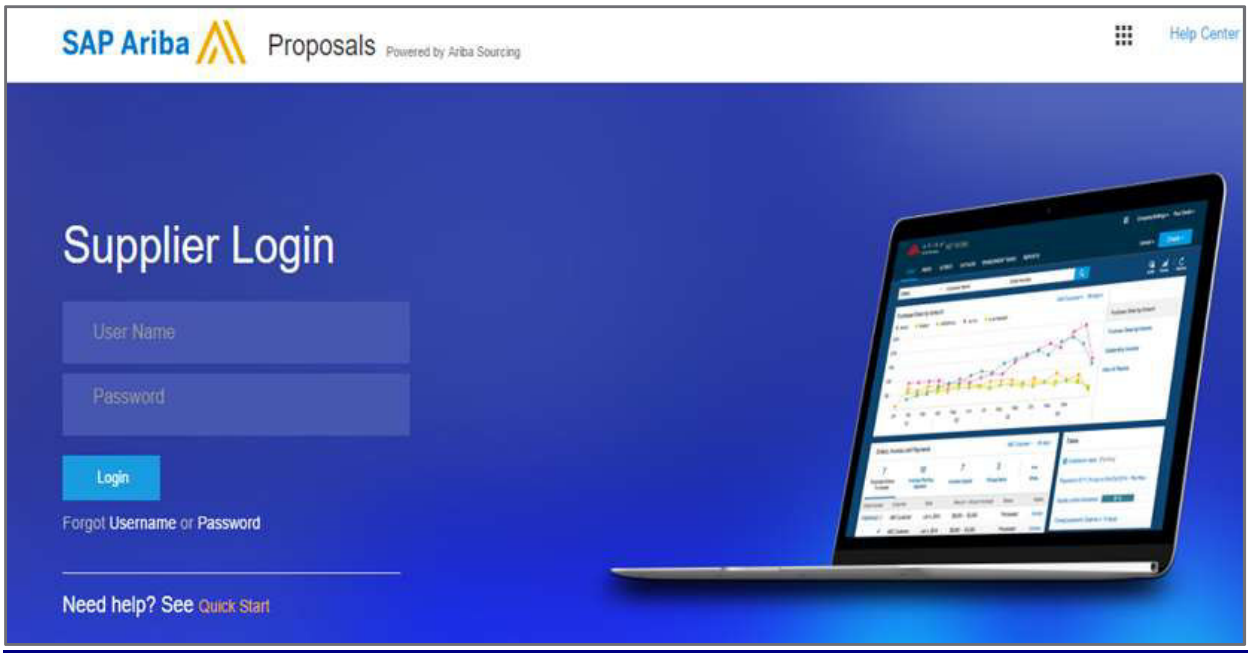

Step 3 - Go to “Ariba Proposals & Questionnaire”.

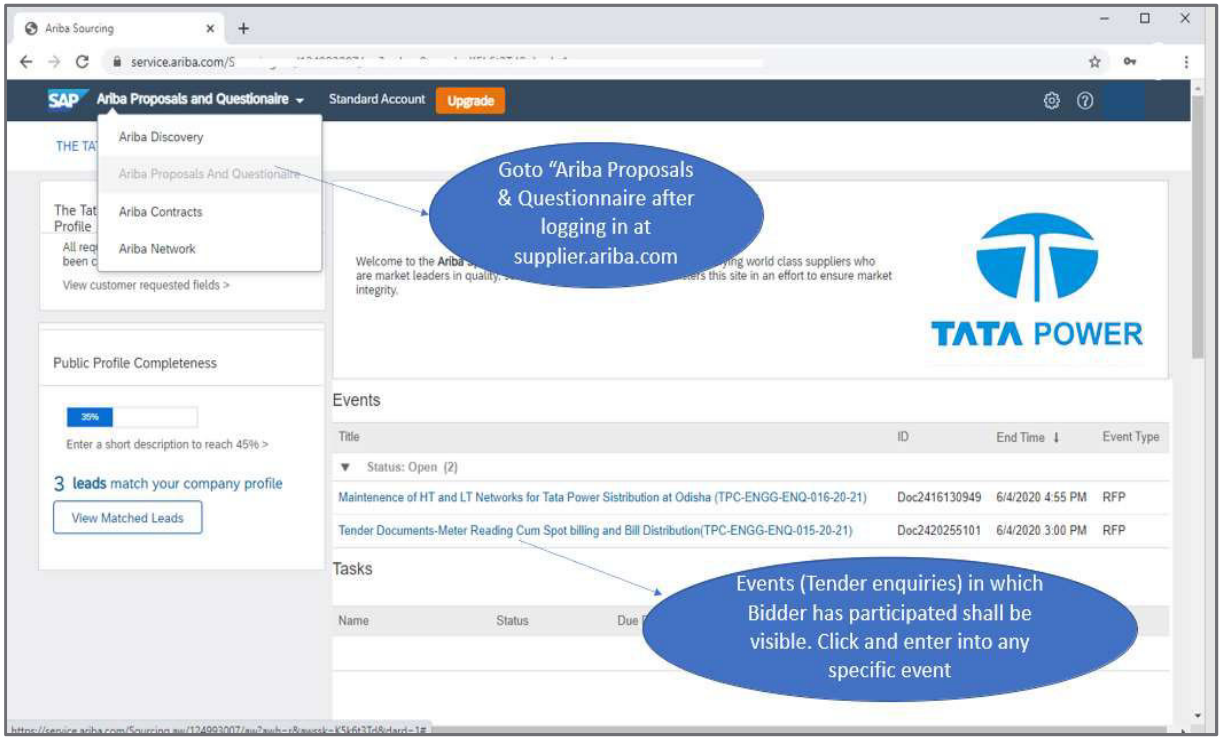

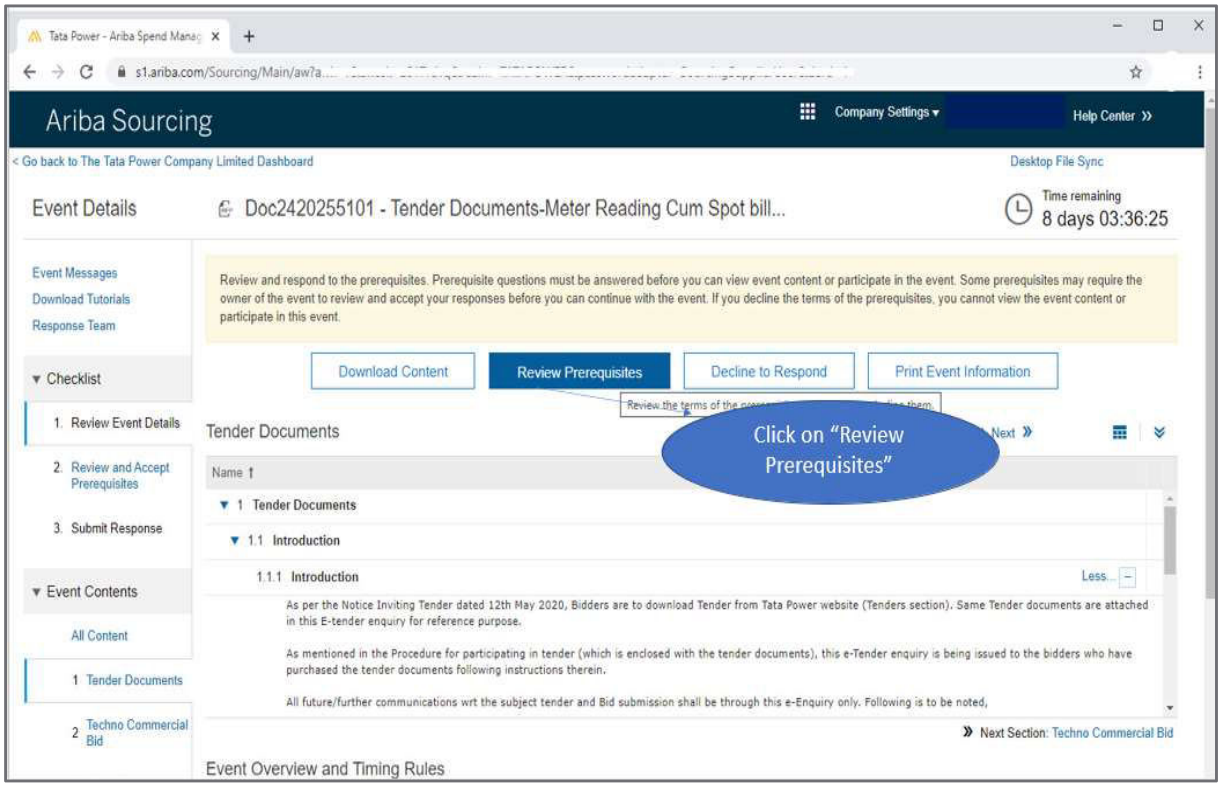

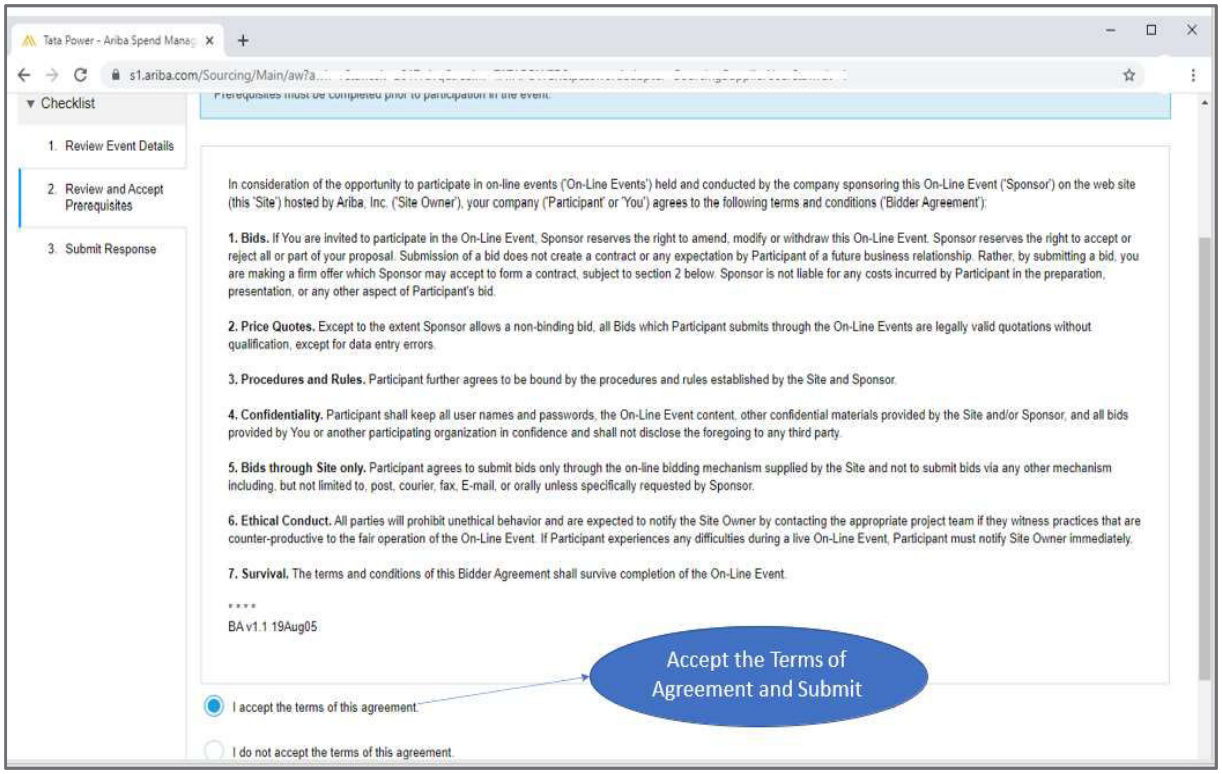
Tata Power - Ariba Spend Manag
s1.ariba.com/Sourcing/Main/aw?a...
Checklist
1. Review Event Details
2. Review and Accept Prerequisites
3. Submit Response
In consideration of the opportunity to participate in on-line events ('On-Line Events') held and conducted by the company sponsoring this On-Line Event ('Sponsor') on the web site (this 'Site') hosted by Ariba, Inc. ('Site Owner'), your company ('Participant' or 'You') agrees to the following terms and conditions ('Bidder Agreement'):
1. Bids. If You are invited to participate in the On-Line Event, Sponsor reserves the right to amend, modify or withdraw this On-Line Event. Sponsor reserves the right to accept or reject all or part of your proposal. Submission of a bid does not create a contract or any expectation by Participant of a future business relationship. Rather, by submitting a bid, you are making a firm offer which Sponsor may accept to form a contract, subject to section 2 below. Sponsor is not liable for any costs incurred by Participant in the preparation, presentation, or any other aspect of Participant's bid.
2. Price Quotes. Except to the extent Sponsor allows a non-binding bid, all Bids which Participant submits through the On-Line Events are legally valid quotations without qualification, except for data entry errors.
3. Procedures and Rules. Participant further agrees to be bound by the procedures and rules established by the Site and Sponsor.
4. Confidentiality. Participant shall keep all user names and passwords, the On-Line Event content, other confidential materials provided by the Site and/or Sponsor, and all bids provided by You or another participating organization in confidence and shall not disclose the foregoing to any third party.
5. Bids through Site only. Participant agrees to submit bids only through the on-line bidding mechanism supplied by the Site and not to submit bids via any other mechanism including, but not limited to, post, courier, fax, E-mail, or orally unless specifically requested by Sponsor.
6. Ethical Conduct. All parties will prohibit unethical behavior and are expected to notify the Site Owner by contacting the appropriate project team if they witness practices that are counter-productive to the fair operation of the On-Line Event. If Participant experiences any difficulties during a live On-Line Event, Participant must notify Site Owner immediately.
7. Survival. The terms and conditions of this Bidder Agreement shall survive completion of the On-Line Event.
****
BA v1.1 19Aug05
I accept the terms of this agreement.
I do not accept the terms of this agreement.
Accept the Terms of Agreement and Submit

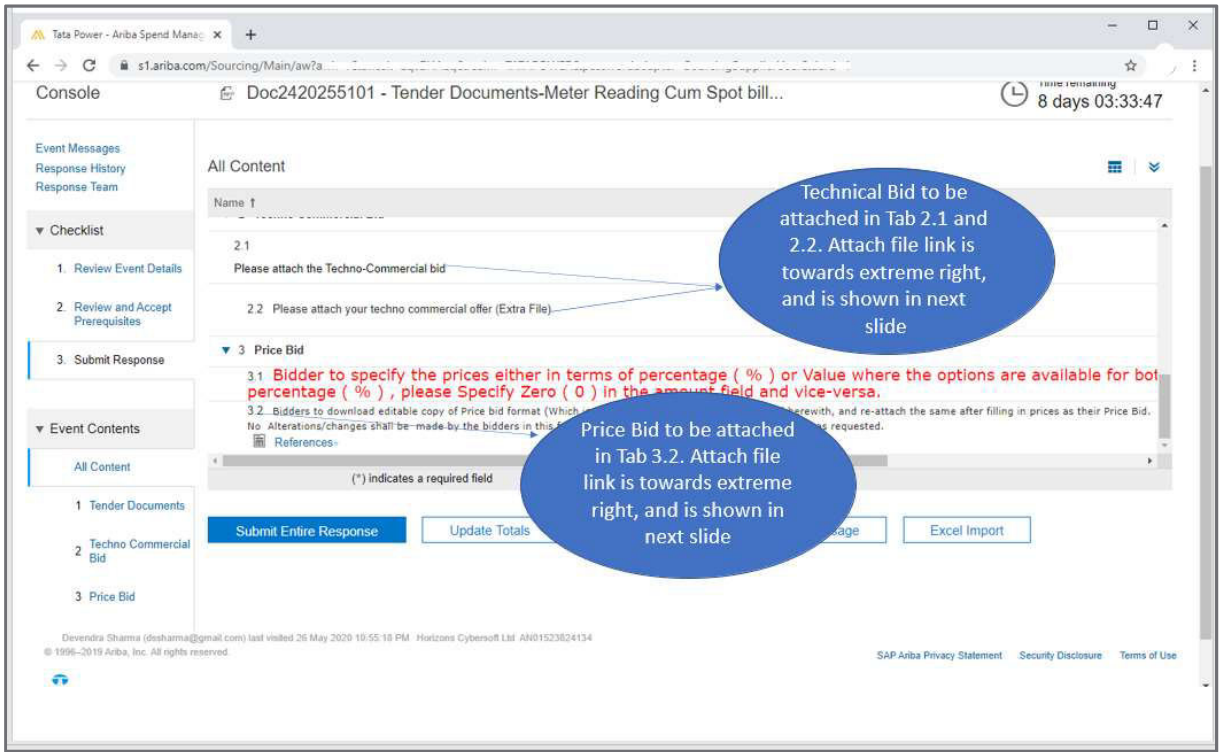
Tata Power - Ariba Spend Manag
s1.ariba.com/Sourcing/Main/aw?a...
Console
Doc2420255101 - Tender Documents-Meter Reading Cum Spot bill...
8 days 03:33:47
Event Messages
Response History
Response Team
Checklist
1. Review Event Details
2. Review and Accept Prerequisites
3. Submit Response
Event Contents
All Content
1 Tender Documents
2 Techno Commercial Bid
3 Price Bid
All Content
Name
2.1
Please attach the Techno-Commercial bid
2.2 Please attach your techno commercial offer (Extra File)
3 Price Bid
3.1 Bidder to specify the prices either in terms of percentage (%) or Value where the options are available for bot
percentage (%) , please Specify Zero (0) in the amount field and vice-versa.
3.2...Bidders to download editable copy of Price bid format (Which
No Alterations/changes shall be made by the bidders in this
References
(*) indicates a required field
Submit Entire Response
Update Totals
Excel Import
Technical Bid to be attached in Tab 2.1 and 2.2. Attach file link is towards extreme right, and is shown in next slide
Price Bid to be attached in Tab 3.2. Attach file link is towards extreme right, and is shown in next slide
SAP Ariba Privacy Statement
Security Disclosure
Terms of Use

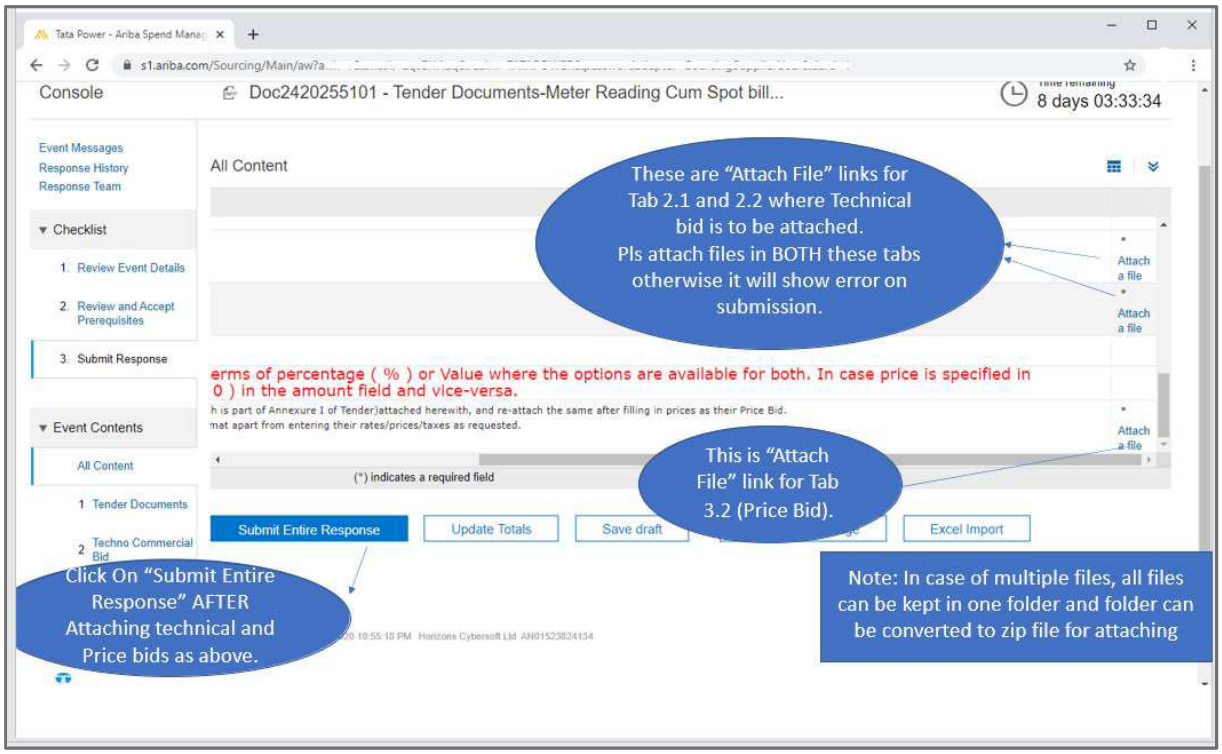

3 Communicating with Tata Power Buyer during e- bidding

Step 1: Click "Compose Message".

Step 2: Compose Your Message and click "Send".

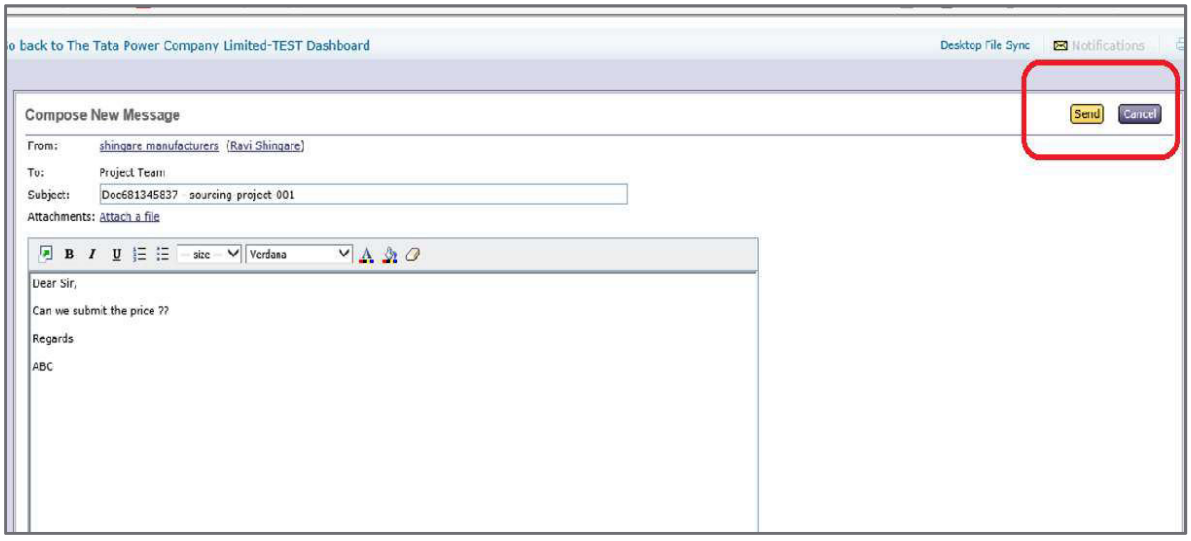

ARIBA TRAINING VIDEOS

Participating in a RFI or RFP on Ariba Network - https://www.youtube.com/watch?v=9_XXUaVyI7o

Support from Ariba - Supplier can raise the Ticket for "Support"

Here are the steps that Suppliers can follow for raising a ticket or requesting a call back from Support team. They can do so without logging in – pls follow the brief instructions given below.

1. Go to login page>Choose "Support" on the bottom right corner

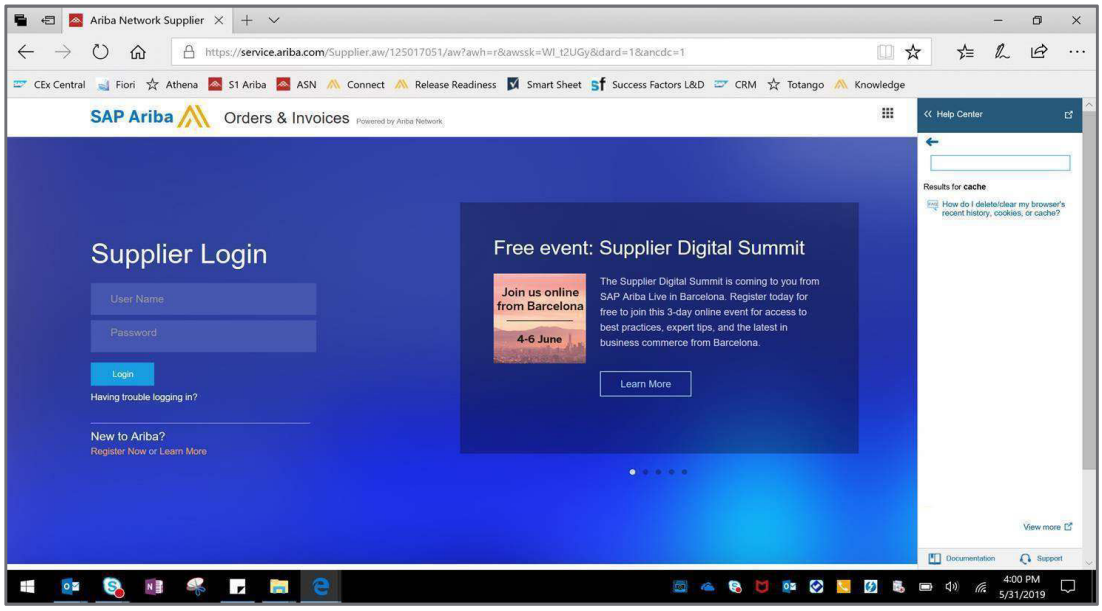

2. Add query and press "Start" – After that, following screen will pop up where you can choose either Get Help by Email or Get Help by Phone.

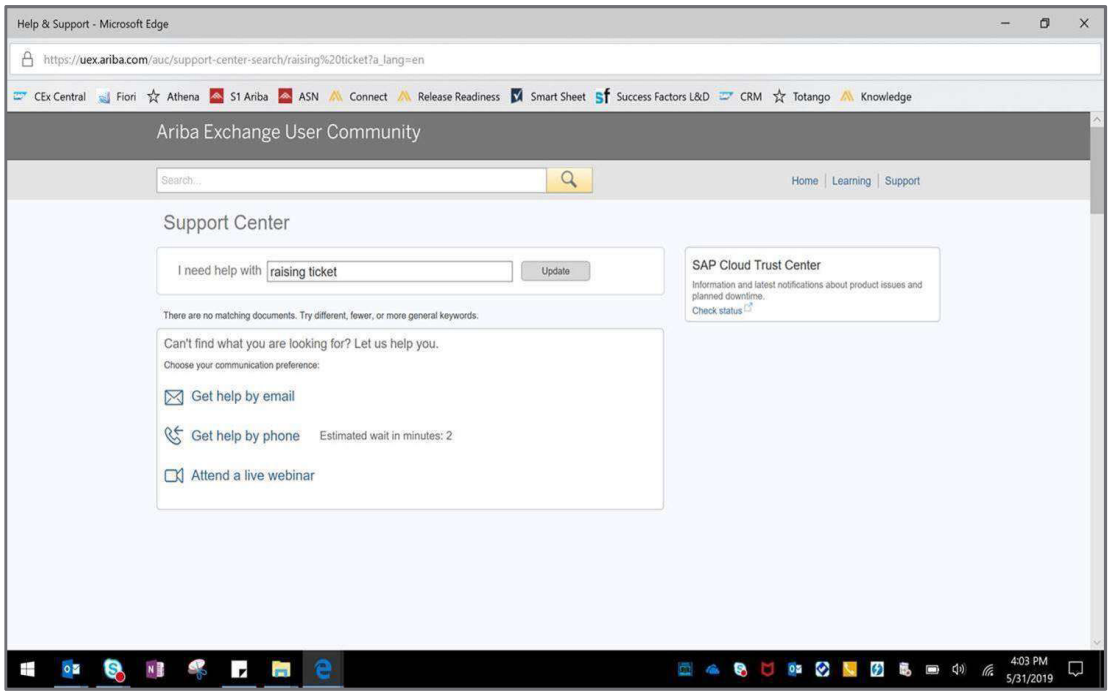

3. Choose phone and add following basic details and you will get call back

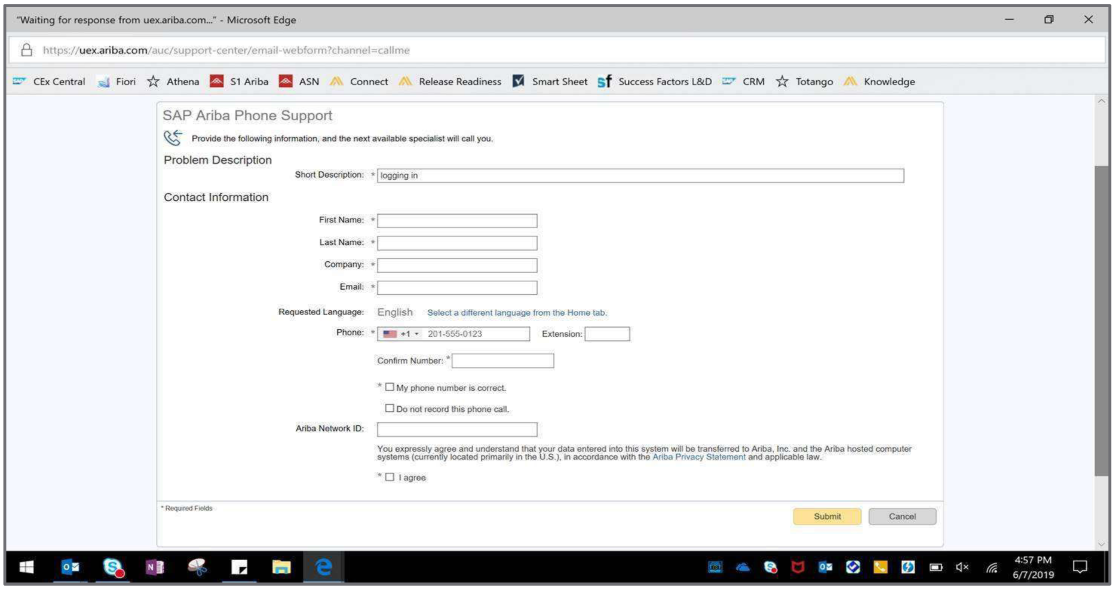

If not by phone, they can ask for a response/support by email.

xxxxxxxxxxxxxxxxxxxxxxxxxxxxxxxxxxxxxxxxxxxxxxxxxxxxxxxxxxxxxxxxxxxxxxxxxxxxxxxxxxxxxxxxxxxxxxxxxxxxxxxxxxxxxxxx

SUPPLIER FREQUENTLY ASKED QUESTIONS

- **If I registered on my buyer's Ariba Sourcing site in the past, do I need to register again?**

Answer- Yes. Although you have registered on your buyer's Ariba Sourcing site in the past, registering on the Ariba Commerce Cloud is required. The registration process only takes a few moments, with a simple one-page registration. Registering on the Ariba Commerce Cloud gives you access to all your buyer relationships with one username and password.

- **What is the Ariba Commerce Cloud?**

Answer: - The Ariba Commerce Cloud is your entry point to all of your seller solutions.
Rather than managing log in information for multiple buyers' sites, you will have one log in and one account. This means fewer passwords to remember, easier user maintenance for your company, and a unified profile for your organization.

- **Do I need to add Product and Service Categories during registration?**

Answer:-Yes; this is a required field. Product and Service Categories classify what your company sells, and the system uses this information to match potential business opportunities with your products and services.

Click **Add Product and Service Categories** to select one or more categories from the list of options. During registration, you only need to choose one category, preferably related to the event you are joining. You can add, refine, or remove categories any time after the registration process.

- **Do I need to add ship-to or service locations during registration?**

Answer: - Yes; this is a required field. Ship-to or Service locations inform buyers where your company sells its products or provides its services, and the system uses this information to match potential business opportunities with your products and services.

Click **Add Ship-to or Service Locations** to select one or more sales territories from a list. You can add, refine, or remove ship-to or service locations any time after the registration process.

Additional Information: - D-U-N-S is a registered trademark of Dun & Bradstreet or its subsidiaries in the United States and other countries.

- **What is the difference between the Email and Username fields in my profile?**

Answer: - The Email field represents the email address where you wish to receive email notifications. The Username field is the identifier that you use to access your account. The Username field must be in email format, but you do not have to use a valid email address.

Note: Leave the **This is my username** box checked if you want your email address to be the same as your username.

- **How do I participate in my buyer's event using an email invitation?**

Answer: - Use the **Click here** link in the email notification to access the sourcing event.

While buyers might customize the email content you receive, all email invitations contain a link to access the event.

Depending on your previous experience with Ariba solutions, do one of the following to access the event after you click the link:

- If you are new user, click **Continue** on the welcome page. You continue to register an Ariba account to link with your buyer and participate in the event.
- If you have used Ariba before and have already accessed an event for the buyer-specific account with your current log in ID, click the **Login** button to continue. Log in with your Ariba username and password in order to participate in the event.
- If you already have an existing Ariba Network, Ariba Discovery, or Ariba Sourcing supplier account, but you have not accessed any events for the inviting buyer's site, use the **Click here if you already have an Ariba Commerce Cloud, Ariba Discovery or Ariba Network account** link. After clicking the link, log in with your existing account to move your information to your buyer's site.

Additional Information:- Registering an Ariba account provides you with a consolidated view of all your customer relationships. With this one profile, you can view business opportunities, participate in sourcing events, participate in contract negotiations, and manage orders, catalogs, and invoices.

- **Why doesn't the link in the email invitation to participate in a sourcing event work?**

Answer:-If you cannot click the link, or the link does not open the log in page, highlight and copy the Uniform Resource Locator (URL), and then paste the URL into your web browser.

- **Can my company have multiple accounts?**

Answer:-Your Company can have multiple Ariba accounts, depending on your business needs. For example, if your company has several locations around the world, you might want a separate account for each region.

Most companies choose to have one account with multiple customer relationships, which provides a centralized location to maintain their company profile information and all of their customer relationships.

- **How do I complete registration if my username already exists?**

Answer: - This message means that you already have an Ariba Network, Ariba Discovery, or Ariba Sourcing supplier account registered under username you entered. You can either register ua new account by creating a new username, or access one of the following sites to request a password reset for the registered username:

- Ariba Network (This login page is used for all Ariba Network, Ariba Sourcing, or Ariba Contracts suppliers).
- Ariba Discovery login page

To reset your password, click the **Having trouble logging in?** Link on the Login page.

- **Nothing happens when I click Forgot Username and enter my email address**

Issue: - Nothing happens when I click the **Forgot Username** link and enter my email address.

Cause: - After you submit your request to retrieve your username, the Ariba Network sends an email notification with usernames that match the email address you submitted.

Some possible reasons why you may not receive this username retrieval email notification:

- The email address on your account does not match the email address you entered when submitting the request.
- Your buyer-specific account was deactivated before you could move it to the Ariba Commerce Cloud. Generally, that means you probably have not participated in an event with that buyer for a while.

Solution: -

- To ensure you receive this email notification:
- Make sure you type the email address configured within your account.

If your buyer-specific account has been deactivated, contact your buyer to determine how to proceed.

- **Where is my password reset email?**

Answer: - After you submit your request for a password reset, Ariba sends instructions to the email address associated with your account. If you didn't receive a password reset email, check the following scenarios to troubleshoot.

The username you entered is in the wrong format, or it isn't associated with the email address you are checking.

- Keep in mind, your username is in the format of a full email address, but it can be associated with any email address you entered previously.
- Your username is also case-sensitive.
- To confirm that you are using the correct username and format, return to the Ariba login page, and click the **Having trouble logging in?** link (**Forgot Username** if you're working in Ariba Discovery).
    - Choose **I forgot my username**, and click **Continue**.
    - Enter the email address associated with your account, and click **Submit**.

- You will receive an email that lists the exact format of the username associated with the email you entered.

You entered the correct username, but you still didn't receive the password reset email notification.

- This can occur if the configured email address is different from the account you are checking.
- You might have multiple accounts for your company, so make sure you are attempting to access the correct account.

Your email configuration or company's security settings might also prevent you from receiving the password reset email. To find out, check your junk mail folder or email filter settings to verify that automated emails from Ariba are not blocked from your email account.

Why do I get this message on the SAP Ariba Login page: "The username and password pair you entered was not found"?

Answer: - You entered an incorrect **Username** or **Password**. You might receive this message if you entered a previous **Username** or **Password**. Remember that your **Username** has the format of an email address, and both the **Username** and **Password** are case sensitive.

Click the **Having trouble logging in?** Link on the Login page if you don't remember your log in information.