Mobile Crane Safety Procedure

Rev No.	Reason for Revision	Prepared By	Checked By	Approval by
Rev 00	First release	R&P Sub Committee	D Kamath	Vijay Chourey
Rev 01	Standardization of procedure	Sambit Kumar Sahoo (Group Head (Mechanical) - Core Technology)	Navendra Singh (Group Head – P & CB; Corp Safety.)	Vijay Chourey (Chief – Corp Safety)
Rev 2	Periodic revision	Navendra Singh Head- Safety (T&D) Corp safety	Rajesh Sharma Head- Safety (Generation) Corp safety	Suresh Khetwani Chief - Corporate Safety & Environment

Contents

Section	Description	Page No.
1.0	OBJECTIVE	3
2.0	SCOPE	3
3.0	EXPECTED RESULTS	3
4.0	ACCOUNTABILITY & RESPONSIBILTIY	3
5.0	GLOSSARY/ DEFINITIONS	5
6.0	PROCEDURES	8
7.0	RECORDS	16
8.0	TRAINING & COMMUNICATION	16
9.0	VERIFICATION	16
10.0	EXCEPTIONS	16
11.0	REFERENCES	16
12.0	REVIEW	17
13.0	ATTACHMENTS/APPENDIX	17
-	Annexure 1: Daily/Periodic Mobile Crane Check List (TPSMS/CSP/MCS/006/FORM/001)	18
-	Annexure 2: Timber Pads required under Outriggers-Examples	19
-	Annexure 3: Checks & Maintenance for Crane rope & hook	21
-	Annexure 4: Mobile Crane Planning & Risk Assessment Guidelines	24
	Annexure 5:Signage for Height Restriction (Example Illustration)	26
	Annexure 6: Load chart for Mobile Crane -90 Ton, Boom length 11-50 M (Typical)	27

1. OBJECTIVE:

Objective of this procedure is to provide minimum requirements for safe operation of mobile cranes and to establish mandatory requirements and practices to protect personnel & property from hazards associated with mobile crane related jobs.

2. SCOPE:

This procedure applies to all operating and project sites of Tata Power Group companies including JVs/Subsidiaries.

3. EXPECTED RESULTS:

3.1. Manage jobs related to Mobile Crane safely.

3.2. Control of incidents related to Mobile Crane operation.

3.3. Compliance to Regulatory requirements related to Mobile Crane & Lifting tools.

4. ACCOUNTABILITY & RESPONSIBILITY:

4.1. ACCOUNTABILITY: Concerned Division's Heads/Assets Custodian.

4.2. RESPONSIBILITY:

4.2.1. Lift Engineer/ Supervisor:

a. Shall check suitability of crane referring Load chart & raise the request in prescribed format including all details. Load Chart will be provided by the crane supplier / contractor (Refer Annexure -6 for load Chart).

b. Completion of mandatory requirements such as vehicle entry permit, Risk assessment.

c. Use tested lifting tool-tackles of appropriate capacity (sling / synthetic belt / D-shackle / tailing hook etc.)

d. Shall prepare Lifting plan for all critical lifts.

e. Ensure Area/ground preparation will be done wherever required. It will be done with consultation of SBU/Site - Civil Engineer if crane is required to position on soft soil.(For supporting crane outriggers sufficient wooden blocks/thick metal sheets will be placed on soft soil)

f. Ensure tool box talk of all movements & rigging operations.

g. He shall discuss rigging plan with rigger, signal man & crane operator for safe execution of job.

h. Ensure operating locations are far enough away from shoring, excavations, trenches, buried utilities, foundations, etc. to eliminate the risk of collapse.

4.2.2. Signalman & Riggers:

a. Shall follow procedure to use mobile crane, best rigging practice for safe operation of crane.

b. Shall use only lifting tools which are tested & of appropriate capacity.

c. Rigging foreman/signal man shall identify himself by wearing reflective jacket.

4.2.3. Crane Operators responsibilities:

a. Check ground condition & position the crane.

b. Crane Operator shall check all interlock & safety devices are in working condition. He will inform his supervisor & concern plant engineer if anyone is not in working condition. (i.e. Anti two blocking, Safe Load Indicator)

c. The operator must understand its functions and limitations as well as its particular operating characteristics.

d. Having a thorough knowledge of the information contained in the crane's operating manual.

e. Familiar with the crane's load chart (Refer Annexure -6 for load Chart). The operator must understand the correct meaning of all notes and warnings and be able to calculate or determine the crane's actual net capacity for every possible configuration of the machine.

f. Inspecting and maintaining the crane regularly as prescribed by both the owner and manufacturer.

g. Informing the owner of any problems, needed maintenance, or necessary repairs to the machine. This should be done in writing, preferably in the machine's logbook or inspection report.

h. Recording in the log or report the details of all inspections, maintenance, and other work done on the crane while in the field.

i. Supervising and training the apprentice if one is present.

j. Being aware of any site conditions that could affect the crane operation. Be particularly cautious around power lines. The operator must refuse to operate if the crane, hoist rope, or load will come closer to a power line than the absolute limit of approach specified in law.

k. Checking that the site is adequately prepared for the crane.

l. Reviewing the planned operation and requirements with the site supervision.

m. Finding out the load and rigging weight and determining where the load is to be placed. Although the operator is not responsible for determining the weight of the load, if the operator lifts it without checking the weight with site supervision, then the operator becomes fully responsible for the lift and any consequences that result.

n. Checking the load chart to ensure that the crane has sufficient net lifting capacity for every lift (Refer Annexure -6 for load Chart).

o. Selecting (from the range diagram) the best boom, jib, and crane configuration to suit the load, site and lift conditions.

p. Assembling, setting up and rigging the crane properly.

q. Following the manufacturer's operating instructions in accordance with the load chart.

r. Considering all factors that might reduce crane lift capacity and adjusting the load weight to suit. This will include such factors as weather conditions and ground conditions.

s. Knowing basics of rigging procedures and ensuring that they are applied (this is possible only when the load is visible to the operator).

t. Maintaining communication with signalman & riggers.
u. Operating mobile crane in a smooth, controlled, and safe manner.
v. Shutting down and securing the machine properly when it is unattended.
w. Exercising the right to refuse to operate the crane if there is cause to suspect the lift might be unsafe.
x. Holding Vehicle Fitness Certificate / copy of valid license / safety card document.
y. Equipment handing checklist should available with operator prior to lift if the load above two MT.
z. Conduct functional tests prior to using the equipment.
aa. At the beginning of each operator's shift, the upper limit switch (anti-two-block) of each hoist shall be tried out under no load. Extreme care shall be exercised; the block protection shall be kept in line.
bb. While any employee is touching the load or hook, there shall be no hoisting, lowering, or traveling.

5. GLOSSARY/ DEFINITIONS:

Attachment description - List type of slings; belts, wire ropes, chains, shackles etc. to be used to attach the load, if required make a simple sketch under lift description.

Anti-two-blocking device - a device that, when activated, disengages all crane functions whose movement can cause two-blocking.

Abnormal operating conditions—Environmental conditions that are unfavorable,
Harmful, or detrimental to the operation of a mobile crane (e.g., excessively high or low ambient temperatures, exposure to weather, corrosive fumes, dust-laden or
Moisture-laden atmospheres, and hazardous locations).

Approver: Location Manager in charge of plant/dept. Authorized shall be as per the permit to work procedure.

Competent person - one who is capable of identifying existing and predictable deficiencies in mobile cranes and boom trucks.

Critical lift—A lift using an Mobile crane where, because of the characteristics and properties or travel path of the load, a hoist failure or loss of control of the load could result in a serious personal injury, serious environmental incident, serious process safety incident, or significant disruption to operations. Critical Lift shall contain one or more of following criteria –

a. Tandem Lift (use of two or more cranes simultaneously)
b. Capacity utilization of crane exceeding over 85%.
c. lifting of man using crane boom
d. Travel path crossing over process plant/process pipelines
e. Cost of load exceeding one Million Rupees.

Capacity loading - It will be calculated by dividing the total weight with the safe workload at lift radius. It shall not exceed 85% of mobile crane. For capacity loading above 85% a lifting plan is required. No capacity loading above 100% shall be allowed, equal to 90% of

load test. If Safe Load Indicator is not installed the capacity loading shall not exceed **60%;** if above a lifting plan is required. For lifting personnel the capacity loading must be below 50%.

Emergency operations - operations that include fire, power line contact, loss of stability, or control malfunction.

Eccentric Load - Load center of gravity does not correspond to the geometrical center, e.g. an unevenly loaded container. In case of eccentric load for heavy loads, say above 2 Tons, center of gravity should be calculated and lifting points defined accordingly. For light loads the most practical is to determine the center of gravity by trial and error without lifting the load completely off the ground.

Ground for crane set up safe - Can the ground support the point load from outriggers or crawlers? Ground loading capability must be established. Underground cables and pipes exposed to the load of the crane shall be identified and if required protected by spreading the load by e.g. applying spreaders under the outriggers. Experiences at site and elsewhere have shown that paved areas are not necessarily having the loading capability as per design.

Hazard Identification & Risk Assessment: Hazard Identification & Risk Assessment is to identify and evaluate the hazards, Risk and put controls measures for safe execution of activities.

Hazard: Source or situation with potential for harm, something that can cause body injury / occupational illness, damage property.

HIRA: Hazard Identification and Risk Assessment

JSA: Job Safety Analysis

Job: A piece of physical work defined by time or other limits and that has a clear start and end point.

Job Safety Analysis: Job safety analysis (JSA) is a procedure which helps integrate accepted safety and health principles and practices into a particular task or job. In a JSA, for each basic step of the job, it is to identify potential hazards and to recommend the safest way to do the job.

LEL: Lower explosive limit

LOTO: Lock out Tag out

Load: Weight of load can be from equipment data sheet, marking on packing, marking on pipe spool, calculation (add 15% allowance for inaccuracies) or weighing. Guessing the weight of the load is not allowed. Crane user shall maintain record of how the weight was derived until the lift is successfully completed.

Length x Width x Height (LxWxH): Is required for bigger equipment for deciding lifting radius and lifting height. For bigger surface, say above 25 m2, also wind loads need to be considered. For small pipe spools, valves etc. this data is not required.

Lift Radius: Maximum horizontal distance between the point at which the center of crane rotation meets the ground and the vertical centerline passing through the load lifting attachment.

Lift Height: The height above the setting of the crane that the load must be lifted to. To derive at the boom height the length of hook, slings and load must be added as well as some free space above any equipment the load will be slew over.

Mobile Crane: A Crane that is self-propelled. This includes crawler cranes, wheel-mounted cranes, Hydra and any variations thereof. Overhead cranes, gantry cranes, side boom tractors, trolley boom cranes, and cranes with a rated capacity of one ton or less are specifically excluded and relevant Standard Operating Procedure (SOP) for the same may be followed.

Non Routine Job / Task: Where an SOP / SMP is not available or the conditions of the SOP / SMP have changed

PPE: Personal Protective Equipment

PTW: Permit to Work

Periodic Inspection: Detailed safety and maintenance inspection performed by a qualified person to verify compliance with the provisions of legal requirements.

Risk: Effect of uncertainty, Risk is a combination of the consequences of an event and the associated “likelihood” of occurrence.

Risk Assessment: A systematic and structured process whereby hazards present in a workplace, or arising from workplace activity, are identified, risks assessed / evaluated, and decisions prioritized in order to reduce risks to acceptable levels.

Safe Access Route: To the place for the crane set up shall be checked with SS or SFE. Ensure that ground can carry the load of the crane. If soil is soaked with water the loading capability is significantly reduced. Check for underground cables and pipes as well as vicinity to any above ground obstructions like fire hydrants, firewater valves and pits. Ensure that trailer bringing the load also has a safe access, not blocked by the intended set up of the crane.

Safe Workload at lift radius: Will be derived from the selected Crane Load Chart for the calculated lift radius and boom length (Refer Annexure -6 for load Chart). Adjustment shall be done in relation to valid load test and only 85% of the load test value shall be considered as safe workload.

Shall: Mandatory requirement

Should: Optional requirement

Severity: The level of consequence / harm of an event that could occur due to exposure to the hazard present

SWL: Safe working load

SLI: Safe Load Indicator, it is a system which cut-off all the unsafe crane operations if overloaded and anti two blocking comply.

SHE: Safety, Health and Environment

Standard lift - If load to be lifted weighs less than 15 ton, it is a standard lift. The crane user is required to complete “Mobile Crane Planning & Risk Assessment Checklist”.

Two-blocking: The condition in which the lower load block or hook assembly comes in contact with the upper load block or boom point sheave assembly. (Condition

under which the load block or load suspended from the hook becomes jammed against the crane structure preventing further winding up of the hoist drum)

Total weight - It is the sum of the weight of the load and weight of hook block, slings and attachment.

Task / Activity: A sequence of steps taken to conduct a job. A task is a sub element of a Job.

Weight of hook block, slings and attachments shall be derived from crane load chart and tables for slings (Refer Annexure -6 for load Chart).

6. PROCEDURES:

6.1. GENERAL PRECAUTIONS :

Observe the following precautions when operating a mobile crane:

6.1.1 Do not leave a crane unattended even for a short time, unless all loads have been removed, lowered to the ground or the engine shut down and brakes applied.

6.1.2 Do not operate a crane beyond 35 KMPH wind speed that may put the load or personnel at risk. Always use the cranes load rating charts for guidance, these have wind and weather factors built into them.

6.1.3 Faulty slings shall be tagged for destruction with an “Out of Service” Tag and returned to store as scrap material.

6.1.4 Discard any wire rope used on a crane, when the visible number of broken wires in any length of rope diameter exceeds 5% of the total number of wires in the wire rope.

6.1.5 Check that there are no loose objects on a load that could fall during lifting.

6.1.6 All mobile cranes fitted with outriggers shall have the outriggers during lifting operation.

6.1.7 No slewing of these cranes is to take place unless outriggers are fully extended and in place.

6.1.8 Do not use the crane to drag the load along the ground, this may result in severe overloading.

6.1.9 The work area, equivalent to that of the extended jib, should be barricaded to ensure un-authorized personnel do not enter the area.

6.1.10 A signalman shall walk alongside a load using tag lines attached to the load, slung from a crane while the load is being transported form one area to another.

6.1.11 Use tag lines to prevent loads from turning or swaying while the crane is in motion of lifting a load.

6.1.12 Avoid sudden braking and fast hoisting, luffing and slewing.

6.1.13 Do not under any circumstances, use a crane to lift a load over personnel, or allow anyone to ride the load.

6.1.14 Keep personnel well clear of the suspended loads.

6.1.15 The crane shall only be operated minimum 6 M away from live electrical lines or away from safe arching zone whichever is higher.

6.2. PLANT AREA PRECAUTIONS:

6.2.1. Do not operate a crane over live process equipment. If such an operation is unavoidable, Risk Assessment shall be prepared with specific scope for working over live process equipment and the risk assessment will include a lift assessment from experienced crane supervisors/operators that operate the hired machines, a Work Permit must be obtained from the area responsible.

6.2.2. When cranes enter into plant areas there is always a chance of the crane being an ignition source and as such will be required to have all necessary permits and certification relating to access criteria as well as a gas test carried out were applicable.

6.2.3. Where people not involved in the lifting operation but could otherwise come into the area steps to prevent that from happening will be required, barriers shall be provided at ground and all levels to prevent this occurring. Appropriate warning signs shall be displayed on the barriers.

6.2.4. All communication devices shall be rated to prevent ignition sources, if working in a plant that has hazardous areas with an ignition risk.

6.3. PRECAUTIONS WHEN OPERATING NEAR LIVE ELECTRICAL LINES:

6.3.1. All electrical lines shall be treated as live unless the crane operator has received, from the electricity distributor or transmission line operator, documentary evidence that the conductors have been positively de-energized, isolated and earthed. Where such documentary evidence has been made available, it shall state the date and time frame of isolation and any special conditions and precautions.

6.3.2. The crane shall only be operated minimum 6 M away from live electrical lines or away from safe arching zone whichever is higher.

6.4. AERIAL CONDUCTOR (OVERHEAD POWERLINE) CONTACT PRECAUTIONS:

If the crane or load contacts live electrical line, concerned department/agency shall be immediately notified of the situation and, until assistance is received, a competent person shall remain in a prominent position to warn of the danger of electrocution.

In such an event the crane operator should act as follows:

6.4.1. Remain inside the cabin or on the crane.

6.4.2. Warn all other personnel to keep away from the crane and not to touch any part of the crane, rope or load.

6.4.3. Without anyone approaching the crane, operate the crane in such a manner to break contact, where possible.

6.4.4. When unable to move or disentangle the crane from the aerial conductors, remain inside the cabin or on the crane and take no further action until it is confirmed that conditions are safe.

6.4.5. When it is essential to leave the cabin or crane because of fire or some other reason then, to avoid being electrocuted, jump clear as far away from the crane as possible and avoid touching the crane and the ground at the same time. When moving away from the crane, shuffle or hop slowly across the affected area to avoid a simultaneous contact with areas of high potential difference

6.5. Inspection of Mobile Crane: There are three levels of crane inspections used at sites. These inspections are conducted by three categories of inspectors. In addition to the mandatory requirements and advisory guidance covered below. Sites should be aware that local regulations may impose additional mandatory inspection requirements beyond those listed in this standard.

6.5.1. Inspection Prior to use on sites (Internal) :

a. Mobile cranes shall be inspected by Operator prior to use on sites.
b. A checklist shall be used to document the inspection. (Annexure - 1)
c. The inspection shall cover the general condition of the crane and the availability of required safety equipment in accordance with manufacturer's recommendations and site requirements.
d. If a mobile crane is removed from a site and then returned, it shall be re-inspected before it is used again on the site.

6.5.2. Frequent Inspection (Internal: daily and monthly – Annexure- 1)

a. Mobile crane operators shall inspect all controls and safety devices including safe travel limit alarms & fill daily checklist before beginning of work in each shift.
b. Crane operator's inspection shall be documented and records maintained.
c. Crane operator shall inspect mobile cranes at least once in a month following the same inspection methodology used in the prior-to-use inspection as per Annexure - 1.

6.5.3. Periodic Inspection (External):

a. Mobile crane equipment shall receive periodic inspection by a competent person (third party) at least annually.
b. This competent person may be supplied by an independent agency.
c. For company-owned mobile cranes, the annual inspection records shall be available on site.
d. For equipment owned, leased, or rented by a contractor, the periodic inspection record shall be reviewed prior to use.
e. Cranes that remain on site and are idle for more than one month shall receive a prior-to-use inspection by Operator before being returned to service.
f. Cranes that are idle for more than six months shall receive a periodic inspection by a competent person before being returned to service.

6.6. Maintenance, Repairs and Modifications:

6.6.1. All maintenance and repairs shall be in accordance with manufacturer's Recommendations.

6.6.2. Preventive maintenance of crane shall be done as per manufacturer's Recommendations.

6.6.3. All minor repair requirement shall fulfilled at the earliest if found while daily check.

6.6.4. For all major repair/maintenance use detailed SOPs which are made based on manufacturer's Recommendations.

6.6.5. Modifications or major repair affecting capacity or safe operation shall have the manufacturer's written approval.

6.6.6. Records of maintenance, repairs, and modifications shall be maintained.

6.6.7. After major repairs/modification the crane shall be thoroughly examined and tested to its maximum capacity and re-certified by competent person.

6.7. Rope Safety & Replacement:

6.7.1. Rope must be secured to drum.

6.7.2. No less than three wraps of rope shall remain on the drum when the hook is in its extreme low position.

6.7.3. Rope end shall be anchored by a clamp securely attached to the drum, or by a socket arrangement approved by the crane or rope manufacturer.

6.7.4. Rope clips attached with U-bolts shall have the U-bolts on the dead or short end of the rope.

6.7.5. Spacing and number of all types of clips shall be in accordance with the clip manufacturer's recommendation or relevant Indian standard.

6.7.6. Clips shall be drop-forged steel in all sizes manufactured commercially. When a newly installed rope has been in operation for an hour, all nuts on the clip bolts shall be retightened

6.7.7. Replacement rope shall be the same size, grade, and construction as the original rope furnished by the crane manufacturer, unless otherwise recommended by a wire rope manufacturer due to actual working condition requirements with test certificate.

6.8. Crane Operations

6.8.1. General Safety Instructions:

a. During hoisting, sudden acceleration or deceleration of the moving load shall not to be permitted.

b. When hoisting, make sure the load does not come in contact with any obstructions primarily electrical. While operating the crane, it should be ensured that the high tension power line is dead/ safe working distance maintained as per voltage level.

c. Cranes should not be used for side pulls. Only freely suspended load may be side pulled.

d. At all times the operator must avoid carrying loads over people. Positive barricading with display board shall be provided around the crane & unauthorized entry shall be restricted inside barricading.

e. The load must not be lowered below the point where less than three full wraps of rope remain on the hoisting drum.

f. Make sure hook have safety latch. The load is well balanced. Avoid tip loading, and loading on hook latch.

g. Never lift the load over the rated capacity (refer load chart only to decide Safe Working Load)

h. Do not operate with kinked, twisted or damaged rope

i. Never leave the suspended load unattended. If it is required because of any failure, high wind condition or specific requirement by plant, additional support under all four outriggers shall be applied. Support below the suspended load also to be provided if possible.

j. Holding brakes on hoists shall be applied automatically when power is removed

k. A drag brake (a brake which provides retarding force without external control) may be applied to hold the trolley in a desired position on the bridge and to eliminate creep with the power off

l. If a load is supported by more than one part of rope, the tension in the parts shall be equalized.

m. Hooks shall meet the manufacturer's recommendations and shall not be over loaded. Hook testing shall be carried out every year with annual inspection of crane.

n. Sufficient barricading around crane shall be made to protect people working near mobile crane before slewing operation check clearance for counter weight.

o. Crane operator should strictly follow the instructions/signals given by site supervisor on job.

p. Special permission to be obtained from site in-charge after considering following guidelines for travelling with suspended load

- Load may need to be secured during travel
- Swing lock and/or other interlocks may need to be engaged
- Consider routes of travel and ground conditions
- Additional signalperson assistance needed
- Speed limit restriction shall be mentioned in Job Safety Analysis (JSA)

6.8.2. Stability function of load charts:

a. Dynamic factors caused by the crane motion and the load (e.g. for boom movement, application of brakes, swaying of the load) and wind effects on the load and boom.

b. Mobile cranes requires that the stability factor of mobile cranes shall be based on 75% of tipping for stationary mode, and 66.6% for pick-and-carry mode.

c. Strong winds impose additional loads on a crane and affect the crane's stability. Maximum permissible wind speed of 36 km/hour shall be for mobile crane operation.

6.8.3. Ground conditions and crane support

a. Where the ground is compact the distance of any part of the crane support timbers from the excavation should be at least equal to the depth of the excavation (1:1 rule).For example, for a three meter deep trench in compact ground, the outrigger timbers or pads should be a horizontal distance of at least three meters away from the closest edge of the trench wall.

b. Where the ground is loose or backfilled the distance of any part of the crane support timbers from the excavation should be at least twice the depth of the excavation (2:1 rule). For example, for a three meter deep trench in backfilled ground, the outrigger timbers or pads should be a horizontal distance of at least six meters away from the closest face of the trench wall.

6.8.4. Timbers pads under outriggers of crane:

a. Size of timber pads required under outriggers should be chosen as per sample example calculation mentioned Annexure –2.

6.8.5. Loading capacity of crane

a. **Capacity loading** will be calculated by dividing the total weight with the safe workload at lift radius. It shall not exceed 85%. For capacity loading above 85% a lifting plan is required. No capacity loading above 100% shall be allowed, equal to 90% of load test.

b. If Safe Load Indicator is not installed the capacity loading shall not exceed 60%; if above a lifting plan is required.

c. Lifting of personnel shall not be allowed using mobile crane.

6.8.6. Multi Crane Lift Considerations (Safety measures for multiple crane lifts):

a. Lifting a load with two or more cranes requires greater attention to planning and supervision, because the effects of the relative motion between the cranes may create additional loadings on the cranes, the load and the lifting gear in place. Where possible, avoid hoisting a load with more than one crane. However, where it is necessary to lift a load using more than one crane, the following steps should be taken:

6.8.6.a.1. A person certificated to work as an intermediate rigger should be in overall control of the lift.

6.8.6.a.2. Make an accurate assessment of:

a. The share of the load which is to be carried by each crane;
b. How the load sharing is to be proportioned; and
c. How the proportioning is to be maintained.

b. Lifting plan shall be made by Lift engineer/Supervisor for critical lifts. The following factors are to be considered when planning for critical lifts:

a. Mass of the load;

b. Position of the center of gravity;
c. Mass of the lifting gear;
d. Safe working capacity of the lifting gear; and
e. Synchronization of crane motions.

6.8.6.b.1. Make sure the instructions to each crane operator and other persons involved are clear, and rehearse the operation wherever possible.

6.8.6.b.2. Use cranes of equal capacity and similar characteristics, where practicable.

6.8.6.b.3. Make sure that both cranes are aligned in the same direction when using non slewing type cranes in the pick-and-carry mode.

6.8.6.b.4. Tandem lifts are not to be undertaken unless all cranes are fitted with a load indicator. Where multiple hoisting operations are carried out, the following minimum capacity requirements for each crane will apply:

(i) For two (2) cranes—20% greater than the calculated share of the load;
(ii) For three (3) cranes—33% greater than the calculated share of the load;
(iii) For four (4) or more cranes—50% greater than the calculated share of the load.

c. If it is not possible to comply with the minimum capacity requirements stated above, then the Lifting engineer must check and certify the lifting plan.

6.8.7. Rigging Safety Tips:

a. Determine the weight of the load. Do not guess.
b. Determine the proper size for certified slings and components.
c. Do not use manila rope for rigging
d. Do not use slings, eye bolts, shackles, or hooks that have been cut, welded, or brazed.
e. Use two guy ropes (one on top & two at the bottom) to avoid swing during lift.
f. Determine the center of gravity and balance the load before moving it
g. Initially lift the load only a few inches to test the rigging and balance
h. Loads should be well secured.
i. Slings should be adequate to the task. Slings should be un-kinked and load balanced and secured.
j. No sudden stops.
k. No loose items on load or crane before lift.
l. Bumping into runway stops is prohibited.
m. Rigger should have knowledge of rigging plan, slings & belt fixing methods.
n. Hoist line must be vertical prior to the lift (remove slack in the hoist slowly).

6.8.8. Handling the Load:

a. **Size of load** - The crane shall not be loaded beyond its rated load except for test purposes as provided in the Rated Load Test section.

6.8.8.a.1. All routes which pass through overhead pipe rack, cable trays etc. should be marked with clear vertical height (headroom). This clear vertical height should be considered in planning stage of movement of oversize load and heavy equipment etc. (refer annexure-5).

6.8.8.a.2. In case of oversize load, it shall be ensured that overall walkway/route from where load shall move/pass is greater than the size of load and lifting equipment considering its width and height (WXH).

b. **Attaching the load**

a. The hoist chain or hoist rope shall be free from kinks or twists and shall not be wrapped around the load.
b. The load shall be attached to the load block hook by means of slings or other approved devices
c. Care shall be taken to make certain that the sling clears all obstacles
d. Care shall be taken to ensure that hook lock is in healthy condition & also the slings resting on hook to be tied by a rope to prevent the slings from coming out of the hook.

c. **Moving the load**:

a. The load shall be well secured and properly balanced in the slings on lifting device before it is lifted more than a few inches
b. Before starting to hoist, the following conditions shall be noted:
c. Hoist rope shall not be kinked
d. Multiple part lines shall not be twisted around each other
e. The hook shall be brought over the load in such a manner as to prevent swinging

d. **Care During hoisting:**

a. There is no sudden acceleration or deceleration of the moving load
b. The load does not contact any obstructions.
c. While any employee is touching the load or hook, there shall be no hoisting, lowering, or traveling.
d. Operators shall avoid carrying loads over people.
e. The operator shall test the brakes each time a load is approaching the rated load handled. The brakes shall be tested by raising the load a few inches and applying the brakes
f. The load shall not be lowered below the point where less than two full wraps of rope remain on the hoisting drum.
g. The supervisor shall ensure that the operator does not leave his position at the controls while the load is suspended.
h. when the load or hook approaches near or over persons, the warning signal should be sounded
i. Control excess swing by providing guy ropes (one on top & two at the bottom) from opposite side of load.

j. The hoist limit switch which controls the upper limit of travel of the load block shall never be used as an operating control

e. **Common Hazards Associated with Mobile Crane:** Assessment of hazards shall be made before movement & use of mobile crane. Examples of hazards to be considered include the following:

a. Electrocution, principally due to proximity of crane boom to overhead/ nearby power lines & underground cables.
b. Ground condition, soft soil, nearby trench etc.
c. The presence and activity of other people and equipment in the vicinity of the work.
d. Toppling of crane, caused by instability or overloading
e. Being struck by swinging, lifting, lowering or falling load. (Due to failure of slings, D-shackles, crane rope, other lifting tool-tackles or mechanical/hydraulic system of crane.)
f. Low illumination
g. Wrong signaling
h. Noise
i. Smoke.
j. Heavy wind.

6.9. Prohibition on use of certain Equipment/device

6.9.1. Escort Hydra series crane are prohibited due to following limitation in it-

a. Obstruction to driver's vision due cabin position causing blind spot.
b. Absence of outriggers
c. Absence of safe load indicator
d. Unguarded wheel

7. Records:

7.1. Daily/Periodic Mobile Crane Check list (TPSMS/CSP/MCS/006/FORM/001) –Retention – 12 Months

7.2. Annual Checklist/Form filled by competent person as per Factory Act – retention – three years.

8. Training & Communication:

8.1. Training of this procedure shall be covered as per Safety Training need identified across divisions.

8.2. Initial Communication to be done through Corporate Communication, Email and subsequently shall be made available at safety portal at Sangam.

9. VERIFICATION

9.1. Verification of implementation shall be done during Mobile crane procedure audit, field safety visit and site inspections.

10. Exceptions: Any Exception to this procedure shall only be done as per Document Control .Procedure (TPSMS/GSP/DC/014).

11. REFERENCES

- Indian Factory Act 1948 and State Factory Rules

- Permit-To-Work Procedure
- Job Safety Analysis (JSA) Procedure
- Hazard Identification & Risk Assessment (HIRA) Procedure
- Heavy Equipment Movement Safety Procedure

12. Review:

12.1. Review of this procedure shall be done as and when but not later than once in every three (03) years. Typical Factors like Changes in legislation, Review of Incident Reports, Inspection & Audit findings, Feedback from users, Recommendations in Incident investigation reports may be inputs for the review and revision of the procedure.

12.2. In case release of revised procedure gets delay due to obtaining feedback or any other reasons, safety advisory may be issued immediately to take precautions for the proposed changes in the procedure and revised procedure should be released subsequently.

13. ATTACHMENTS/APPENDIX :

Refer Sample formats as Annexures attached in next page of this document:

Annexure 1: Daily/Periodic Mobile Crane Check list (TPSMS/CSP/MCS/006/FORM/001)
Annexure 2: Timber pads required under Outriggers- Examples
Annexure 3: Checks & Maintenance for Crane rope & hook
Annexure 4: Mobile Crane Planning & Risk Assessment guidelines
Annexure 5: Signage for Height Restriction (Example Illustration)
Annexure 6: Load chart for Mobile Crane -90 Ton, Boom length 11-50 M (Typical)

TPSMS/CSP/MCS/006/FORM/001 **Annexure-1**

Mobile Crane Daily Check List

Operator:		**Company:**	
Crane type:		**Model:**	
Location:		**Unit no.:**	
Date:		**Shift:**	
1 – Pre Start-up Walk-around	**Status** OK NO	**3 – Start-up**	**Status** OK NO
Cab – glass/doors/2nd exit	☐ ☐	Instrumentation – warning	☐ ☐
Steps/ladder – secure/clean	☐ ☐	Oil pressure	☐ ☐
Wheels & tires – rims/lug nuts/tire condition/ inflation	☐ ☐	Air (brake) pressure	☐ ☐
Boom – angle indicator/jib/condition	☐ ☐	Coolant temperature	☐ ☐
Main/auxiliary hoist(s) – hook/attachment/block/sheaves/wire rope	☐ ☐	Battery charge rate/level	☐ ☐
Hydraulics – cylinders/hosing/pins/fittings/fluid level	☐ ☐	Fuel level	☐ ☐
Turntable – ring & pinion condition	☐ ☐	Noises – engine sounds normal	☐ ☐
Engine – fluids/belts/hoses/leaks/debris	☐ ☐	Lights	☐ ☐
Battery/batteries – secure/electrolyte level/ connections clean & tight	☐ ☐	Horn	☐ ☐
Counterweight – secure/condition	☐ ☐	Accessories – wipers/heater/fan/radio	☐ ☐
Drum(s) – condition/line spooled properly	☐ ☐	LMI – functions/calibrated properly	☐ ☐
Air (brake) tanks – condition/water drained/ petcock closed	☐ ☐	House lock-pin – disengaged (as applicable)	☐ ☐
Outriggers/stabilizers – condition/leaks	☐ ☐	Other:	
Lights/strobes – condition	☐ ☐		
Warning decals – in place/ condition/ legible	☐ ☐		
2 – Interior Cab Checks	**Status** OK NO	**4 - Function Checks**	**Status** OK NO
Housekeeping	☐ ☐	Boom – lift/lower/extend/retract	☐ ☐
Fire extinguisher	☐ ☐	Hoist(s) – raise/lower	☐ ☐
Manufacturer's operating manual	☐ ☐	Turntable swing	☐ ☐
Log book	☐ ☐	Outriggers/stabilizers	☐ ☐
Inspection Certificate	☐ ☐	Steering	☐ ☐
External Certification	☐ ☐	Transmission – gear & direction	☐ ☐
Load charts/range diagrams	☐ ☐	Brakes	☐ ☐
Level indicator	☐ ☐	Other:	☐ ☐
Seat belt	☐ ☐		☐ ☐
Comments			
Operator Name & Sign:			

Annexure - 2

(Page 1 of 2)

Timber pads required under Outriggers- Examples

Sample Example 1 – for a 40 MT crane

A mobile crane is to be set up on its outriggers on asphalt or dry clay/sand. The crane has a total mass of 32 tonnes and is to lift a 21.65-tonne load—21.65 tonnes is the maximum the crane can lift in the stability range of the load chart at 6 mtr radius. The lift plan requires the load to be slewed above each outrigger foot. Calculate the minimum required area of the timbers to be placed under each outrigger when lifting directly above an outrigger foot.
Lifted load (L) = 21.65 tonnes
Total crane mass (CM) = 32 tonnes
Maximum allowable ground pressure (PMAX) for Asphalt/dry sand/clay = 20 tonnes per m2
area = 0.65 x (CM + L) / PMAX
area = 0.65 x (32 tonnes + 21.65 tonnes) / 20 tonnes per m2
area = 22.75 tonnes / 20 tonnes per m2
area = 1.74 m2
Dimensions of outrigger timbers: √1.74 m2 = 1.32 m
Therefore, length x width of timbers required = 1320 mm x 1320 mm.

Sample Example 2 - for 30 Mt crane

A mobile crane is to be set up on its outriggers on asphalt or dry clay/sand. The crane has a total mass of 29 tonnes and is to lift a 15-tonne load—15 tonnes is the maximum the crane can lift in the stability range of the load chart at 6 mtr radius. The lift plan requires the load to be slewed above each outrigger foot. Calculate the minimum required area of the timbers to be placed under each outrigger when lifting directly above an outrigger foot.
Lifted load (L) = 15 tonnes
Total crane mass (CM) = 29 tonnes
Maximum allowable ground pressure (PMAX)) for Asphalt/dry sand/clay = 20 tonnes per m2
area = 0.65 x (CM + L) / PMAX
area = 0.65 x (29 tonnes + 15 tonnes) / 20 tonnes per m2
area = 22.75 tonnes / 20 tonnes per m2
area = 1.43 m2
Dimensions of outrigger timbers: √1.43 m2 = 1.2 m
Therefore, length x width of timbers required = 1200 mm x 1200 mm.

Sample Example 3 - for 125 Mt crane AMK-125

A mobile crane is to be set up on its outriggers on asphalt or dry clay/sand. The crane has a total mass of 86 tonnes and is to lift a 68-tonne load - 68 tonnes is the maximum the crane can lift in the stability range of the load chart at 6 mtr radius. The lift plan requires the load to be

Annexure - 2

slewed above each outrigger foot. Calculate the minimum required area of the timbers to be placed under each outrigger when lifting directly above an outrigger foot.
Lifted load (L) = 86 tonnes
Total crane mass (CM) = 68 tonnes
Maximum allowable ground pressure (PMAX)) for Asphalt/dry sand/clay = 20 tonnes per m2
area = 0.65 x (CM + L) / PMAX
area = 0.65 x (86 tonnes + 68 tonnes) / 20 tonnes per m2
area = 100 tonnes / 20 tonnes per m2
area = 5.00 m2
Dimensions of outrigger timbers: √5.00 m2 = 2.23 m
Therefore, length x width of timbers required = 2230 mm x 2230 mm.

Maximum permissible ground pressure is shown for reference in below table.

Ground type	Maximum permissible ground pressure, P_{MAX} (Tonnes per m²)
Hard rock	200
Shale rock and sandstone	80
Compacted gravel (with up to 20% sand)	40
Asphalt	20
Compacted sand	20
Stiff clay (dry)	20
Soft clay (dry)	10
Loose sand	10
Wet clay	Less than 10

Annexure - 3

(Page 1 of 3)

Checks & Maintenance for Crane rope & hook

Checks and Maintenance: Crane ropes, rope pulleys, load hooks and rope end fittings

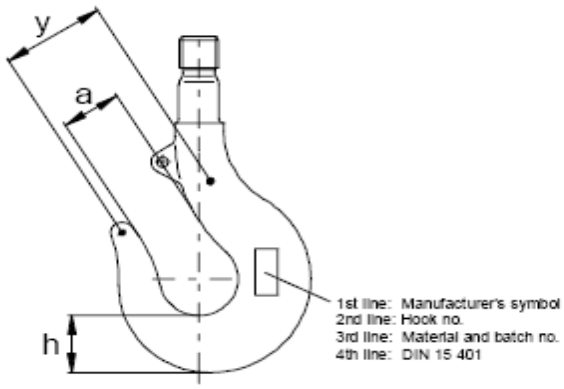

Load hook sizes

Load hooks can be identified by the designation LAH .... on the type plate or by the designation RSN .... or RFN .... on the hook itself.

all dimensions in mm

Load hook	Hook no.	a	h	y	Threads
Lah 010 ...	RSN 08	38	37	-	M 24
Lah 020 ...	RSN 1.6	45	48	-	M 30
Lah 030 ...	RSN 2.5	50	58	-	M 36
Lah 050 ...	RSN 4	56	67	-	M 42
Lah 063 ...	RSN 5	63	75	-	M 45
Lah 080 ...	RSN 6	71	85	115	Rd 50 ◊ 6
Lah 100 ...	RSN 8	80	95	125	Rd 56 ◊ 6
Lah 125 ...	RFN 10	90	106	175	Rd 64 ◊ 8
Lah 160 ...	RFN 12	100	118	200	Rd 72 ◊ 8
Lah 200 ...	RFN 16	112	132	220	Rd 80 ◊ 10
Lah 250 ...	RFN 20	125	150	240	Rd 90 ◊ 10
Lah 320 ...	RFN 25	140	170	250	Rd 100 ◊ 12
Lah 400 ...	RFN 32	160	190	320	Rd 110 ◊ 12
Lah 500 ...	RFN 40	180	212	350	Rd 125 ◊ 14
Lah 630 ...	RFN 50	200	236	400	Rd 140 ◊ 16
Lah 800 ...	RFN 80	224	265	400	Rd 160 ◊ 18

⚠ Dimension "y" may differ from the value specified in the table (forging tolerance). Either the value in the table or a different value is engraved in the hook shank.

Monitoring and checking: Load hook

What to check:

Deformation

Load hooks according to DIN 15 401 and 15 402 up to load hook no. 5:

Hook opening and deformation, **dimensions "y" and "a" + max. 10%**

If the opening has widened by more than 10% of the maximum permissible limit, replace the load hook !

Surface fissures

If deformations are apparent: **Check surface for fissures** using an appropriate method **- or - replace the load hook !**

Damage and surface fissures may be removed notch-less, provided that the permissible tolerance levels are not exceeded.

If it is not possible to check the installed load hook, dismantle it !
Before making checks, ensure that the surfaces are put into a condition permitting the definite identification of surface fissures !

Wear

Wear on single or twin-hooks **may not be greater than 5% of the height "h"** according to DIN 15 401 and DIN 15 402.

It is **not permitted** to carry out welding work on load hooks, e.g. to compensate for wear !

Annexure - 3

(Page 2 of 3)

Checks and Maintenance: Crane ropes, rope pulleys, load hooks and rope end fittings

Figure 1

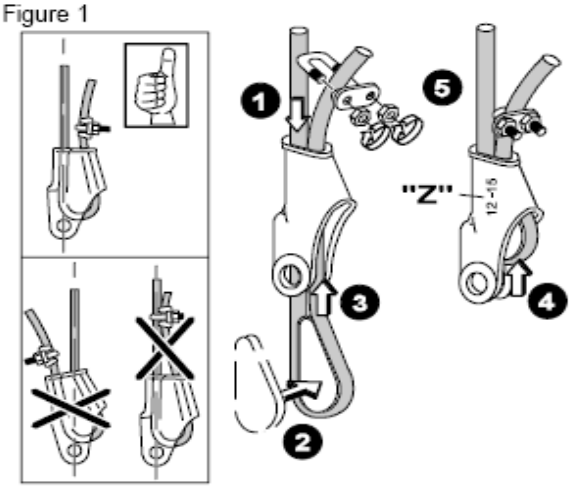

Figure 2

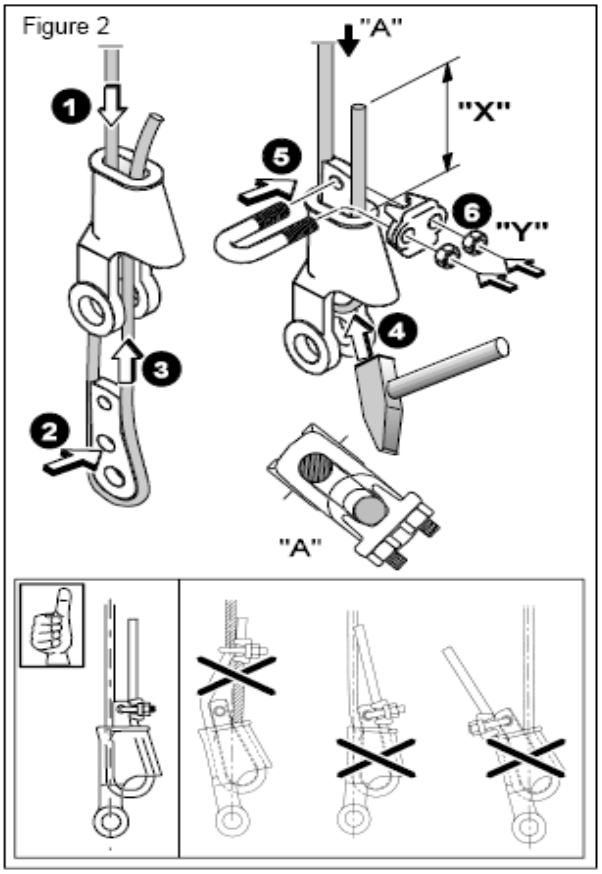

Installation, inspection and maintenance of wedge sockets !

Page 1 of 2

If the wedge socket is not properly installed:

- **Loads / crane parts may fall down. A falling load can seriously injure or kill.**
- **Do not side load the wedge socket.**

Maintenance and Inspection:

Always inspect the wedge socket, the wedge and the pin before using.

Do not use parts showing cracks.

Do not use modified or substitute parts.

Repair minor nicks or gouges to socket or pin by lightly grinding until surfaces are smooth. Do not reduce the original dimensions by more than 10% !
Damage must not be repaired by welding.

Inspect permanent connections once a year, or more often in severe operating conditions.

Installation:

See figures 1 and 2 for the installation process. These instructions must be followed.

The permissible rope diameter can be seen on the wedge socket body (**"Z"**). **Alternatively** it can be determined by the holes in the wedge.

Example: The rope diameter for the following wedge socket size is:

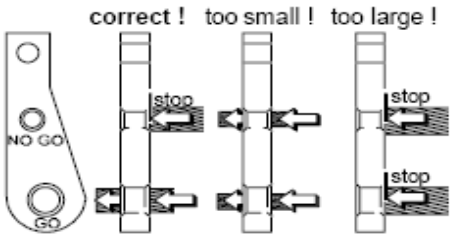

Annexure - 3

(Page 3 of 3)

Checks and Maintenance: Crane ropes, rope pulleys, load hooks and rope end fittings

Figure 3

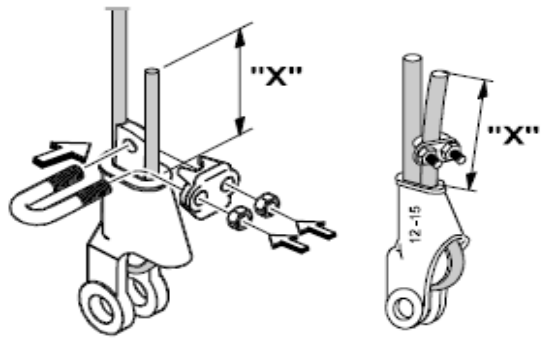

Installation, inspection and maintenance of wedge sockets !

Page 2 of 2

Tail length of the dead end: "X"

Standard 6 to 8 strand wire ropes:
minimum of 6 rope diameters,
but not less than 150 mm

Rotation resistant wire ropes:
minimum of 20 rope diameters,
but not less than 150 mm
Ensure that the dead end is welded.

Annexure – 4

(Page 1 of 2)

Mobile Crane Planning & Risk Assessment Guidelines

These checks should be done for each new set up even if the same crane is deployed in different set ups.

- **Does lift radius and boom length check with the planned**: With the crane set up measure the lift radius and check the boom length required. For hydraulic cranes the boom length can be read on the SLI and the lift radius measured checked against the SLI reading for lift radius. For crawler cranes boom length is fixed and can be taken from the load chart using the relevant configuration. If lift radius or/and boom length is bigger than planned, the capacity loading must be recalculated to check that the loading still is within prescribed limit; 85% for cranes with SLI, 60% for cranes without SLI or for crane used for lifting personnel.
- **Are outriggers fully extended, placed on load spreaders and crane leveled:** Check that all 4 outriggers are fully extended to the marking on each of the outriggers. **It is not allowed to proceed with the lift if any of the outriggers cannot fully be extended.** If possible always use the spreaders provided with the crane under the outriggers. Is the crane leveled as per spirit level installed in the crane? If the crane will move free on wheels (hydras) or on crawler with the load suspended ensure it will stay leveled.
- **Are out riggers set on solid ground free from water logging/soaking and on safe distance from any excavation, storm-water channel, pit, trench etc.:** Do not allow the crane setting on ground with water logging or soil soaked with water as the ground loading capability might be much lower than expected. The distance of any outrigger to an excavation, storm-water channel, pit (not RCC pit), trench must at least be equal to the depth of the cavity. Outriggers should not be placed above storm-water culverts without spreading the load.
- **crane boom:** When crane boom, fully extended, is pointed towards the overhead line the distance must be at least 6 meters away from the line. If required the line must be made dead and permit given by authorized electrical person.
- **Is crane slewing/movement free from any obstruction with at least 0.6 m:** Check that the crane can slew with the prescribed safety margin of 0.6 m, if not possible barricade the area to stop personnel access.
- **Is the crane free of any oil leakage:** When walking around the crane check for any oil leakage from the hydraulic system especially on the outriggers.
- **Is weather condition safe for lift:** High wind speed will have a significant impact on loads with high wind areas, say above 25 m^2. The wind might cause the lift line to get out of plumb and cause the crane to topple. If wind speed is above **35 km/hr** or 19.4 knots the lift shall be stopped. For lift of personnel the wind speed limit is 14 knots**.** Call MFS, ext. 11191, to get actual wind speed. Do not permit the lift if visibility is limited by e.g.heavy rain or fog. Avoid lift during not daylight hours**.** Do not lift during thunderstorm.

- **Are slings marked with safe load, valid color-coding and without any visual damage. Is capacity loading below 50%:** All slings, belts, shackles shall be visual inspected for wear and tear, cuts before any lift. **No damage shall be accepted.** The load on slings/belts shackles should not exceed 50% of the marked safe load. When lifting plan available higher sling loading is acceptable. Account for sling angles when more than one sling is used. A sling angle of 60 degree towards the load will increase the load in the sling with 15%, 45 degree with 41% and 30 degree with 100%. Slings used for lifting personnel shall only be loaded to 20%.
- **Are slings protected from sharp edges on the load:** A couple of incidences at site have happened when sharp edges have cut through the belts and caused the load to drop. Ensure that the slings are protected by e.g. fitting wooden beams between load and slings.
- **Is angle between sling and load more than 60 degree:** A small angle will cause high load on the sling and load, see above. If possible keep the angle above 60 degree and the extra load will be limited to 15%.
- **Are shackles used if more than 2 slings are attached to the hook:** To avoid undue load on the slings from each other, the slings shall be connected to the hook by help of shackles if more than 2 slings are used.
- **Is the load free from adhesion:** Ensure that the load is free from adhesion by e.g. use of a jack. If it is not possible to conclude that the load is free, e.g. during dismantling operation, add 100% to the load and check capacity loading.
- **Are lifting lugs free from visual defects:** Visual inspect lifting lugs for any defects.
- **Is load center of gravity known:** For eccentric load with unknown center of gravity always determine center of gravity by trial and error without lifting the load completely off the ground.
- **Is lift line plumb:** It is not allowed to use the crane for dragging the load as this could cause the crane to topple. The lift line shall hang vertical free from any obstruction above the center of gravity of the load.
- **Is the lift area free from any other conflicting activities:** During the lift other activities in the direct vicinity and especially under the load must temporarily be stopped. A crane operation is a hot job and no draining of hydrocarbon shall be allowed in the vicinity as long as the crane engine is running.
- **Is signaler in high visibility vest:** Ensure that the person signaling to the crane operator is in high visibility vest.
- **Is lift area barricaded? Are the slinger and signaler clear of the lifted load by use of guide ropes:** This is the ultimate precaution for all lifts. No person shall be allowed under suspended load. If it is not practical to barricade the area other means to keep people away must be used.

Annexure- 5

Signage for Height and Width Restriction (Example Illustration)

Annexure- 6
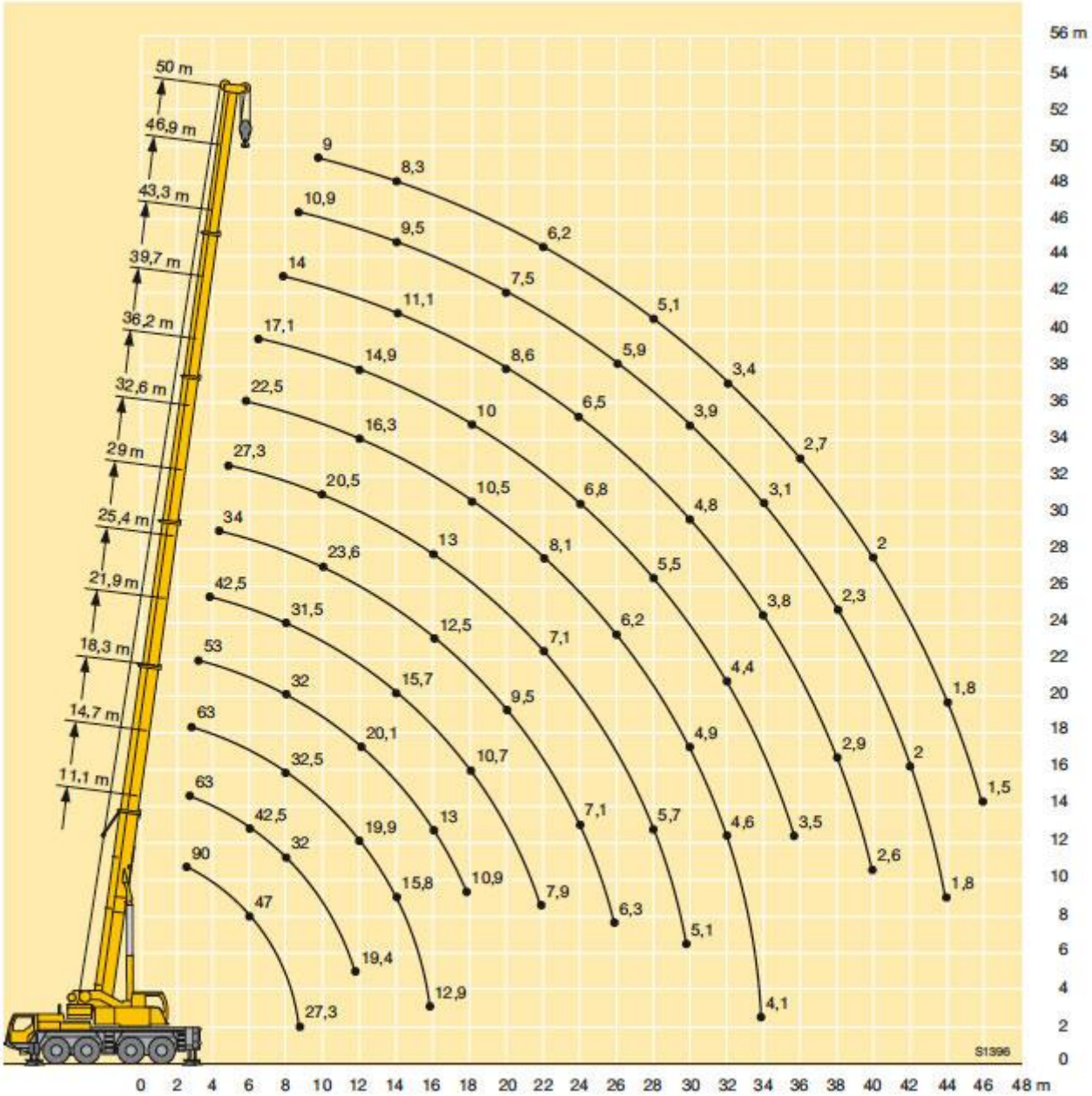
Load chart for Mobile Crane -90 Ton, Boom length 11-50 M (Typical)